THE
University of Vermont
MEDICAL CENTER

By Electronic & U.S. Mail

September 28, 2022

Donna Jerry
Senior Health Policy Analyst
Green Mountain Care Board
144 State Street
Montpelier, Vermont 05602
donna.jerry@vermont.gov

Re: Letter of Intent and Certificate of Need Application

Dear Donna:

Please find enclosed the following documents pertaining to The University of Vermont Medical Center Inc.'s Certificate of Need Application for CT Equipment Replacement with Associated Room Renovations and the Construction of a Mobile Pad Addition to the Essex Primary Care Facility:

1. Letter of Intent, requesting expedited review;
2. Verification under Oath, signed by Stephen Leffler, M.D.;
3. Certificate of Need Application.

Since we are requesting expedited review, we understand that your office will provide public notice in accordance with 18 V.S.A. §§ 9440(c)(2)(B) and 9440(c)(5)(A).

We look forward to working with you during the review process. Please contact me if you have any questions concerning our application materials.

Sincerely,

Amanda S. Angell
Assistant General Counsel

cc: Stephen Leffler, M.D.

THE
University of Vermont
MEDICAL CENTER

By Electronic & U.S. Mail

September 28, 2022

Donna Jerry
Senior Health Policy Analyst
Green Mountain Care Board
144 State Street
Montpelier, Vermont 05602
donna.jerry@vermont.gov

Re: CON Application and Request for Expedited Review for CT Equipment Replacement with Associated Room Renovations; Construction of Mobile Pad Addition to the Essex Primary Care Facility

Dear Donna:

The University of Vermont Medical Center Inc. ("UVMMC") files this Certificate of Need application seeking expedited approval without a hearing and with such other abbreviated process as the Green Mountain Care Board ("the Board" or "GMCB") finds appropriate, for its two-part project: (1) replacement of a 64-slice Philips Brilliance CT scanner with a 256-slice Philips Spectral CT 7500 scanner and associated room renovations in McClure Level 1, Room 1079 (CT Room 2); and (2) construction of a mobile pad addition to the Essex Primary Care facility to house a mobile CT trailer rental.

A request for expedited review may be granted if the project is likely to be uncontested and does not substantially alter services. 18 V.S.A. § 9440(c)(5); GMCB Rule 4.00, *Certificate of Need* ("Rule 4"). UVMMC's application, attached, meets these requirements.

This project is not expected to be contested. The project is neither a driver of volume, nor does it introduce a health care service not already available at UVMMC. Rather, the Project replaces an outdated, 17-year old CT scanner nearing the end of its useful life with a new unit that produces higher-quality, more precise imaging, has advanced functionalities that serve a wider pool of patients, and which can in some instances eliminate the need for multiple or follow-up scans. In addition to the equipment replacement, UVMMC will construct a mobile pad at the Essex Primary Care facility to accommodate a rented mobile CT unit during the new unit's installation. When the project is completed, the mobile paid will be available on an ongoing basis for CT and other mobile imaging trailers (*e.g.*, PET, MRI) when additional capacity is needed.

The project does not substantially alter services offered by UVMMC. Pursuant to Rule 4 § 4304.2, a project does not substantially alter services if:

(a) the project raises no significant health care policy or planning concerns; and

(b)(i) the expenditures associated with the proposed project or action do not have a significant impact on the services provided, the cost of health care, or the financial strength of UVMMC; or

(ii) the project consists of the routine replacement of existing equipment that is depreciated, out-of-date or obsolete, or consists of the routine renovation, repair or maintenance of existing buildings and facilities.

The project raises no significant health care policy or planning concerns. CT scanning is an established health care service that provides 3-D images of the body and organs for surgical planning and treatment and to assist in the diagnosis of abnormalities and injuries. Notwithstanding service disruptions attributable to COVID-19, UVMMC's CT volumes have steadily risen and are projected to continue their growth, driven largely by an aging population ages and increased patient demand and acuity across service lines. This Project will not drive volumes, but will help absorb projected growth while providing high-quality imaging services to UVMMC patients. Additionally, the proposed mobile pad at the Essex Primary Care Facility will allow for needed flexibility if imaging volume demands rise, or equipment needs to be replaced or serviced.

The Project's capital cost of $3.46M, relative to the UVMMC's overall budget, will not have a significant impact on existing services, the cost of health care, or the UVMMC's financial health. The Project will be completed without debt financing.

Last, the Project's primary focus is the routine replacement of equipment that is that is fully depreciated and at the end of its useful life.

We believe the Board may declare this application uncontested and issue written notice granting a Certificate of Need without any further process, and we respectfully ask the Board to do so. In accordance with 18 V.S.A. § 9440(c)(2) and Rule 4, we provide the following information about the Project, which we further discuss in the enclosed application:

Project Scope and Expenditures: The Project replaces the 64-slice, 17-year old Philips Brilliance CT scanner in McClure Level 1, Room 1079 (CT Room 2) with a 256-slice Philips Spectral 7500 CT scanner. The Project includes renovations associated with the equipment replacement.

The Project also includes construction of a mobile pad addition to the Essex Primary Care facility. UVMMC will rent a mobile CT unit that will be used during installation of the new CT scanner on the Main Campus. The pad can accommodate other mobile imaging equipment (CT, PET, MRI) and will be used as needed for additional capacity and during equipment replacements and downtimes.

The total project cost is $3.46M, which includes approximately $1.9M in equipment costs, $556k for facilities costs on the Main Campus, $945k in costs related to the Essex mobile pad, and $55k in capitalized interest. Construction is expected to last 24 weeks.

Project Rationale: Computed Tomography is a core service routinely utilized to provide 3-D images of the body and organs for surgical planning and treatment and to assist in the diagnosis of abnormalities and injuries. UVMMC's CT volumes have been steadily growing; from FY16 to FY21, volumes grew by 30% and are projected to grow by 31% over the next decade.

The Project will replace the scanner in CT Room 2, which was put into service in 2005 and is the UVMMC's oldest CT scanner. It is at the end of its useful life and experiencing image deterioration, raising concerns about maintenance and servicing. UVMMC will replace the existing scanner with a new unit with enhanced functionalities including superior imaging quality, advanced cardiac capabilities, and a larger bore that can accommodate bariatric patients and low table (wheelchair) height, providing a better patient experience.

Need to be Addressed: The existing scanner is outdated and at the end of its useful life. Replacing it now avoids service interruptions and allows UVMMC to continue to address the growth in demand for CT scans by providing high-quality scanning services to a broader patient pool. The mobile pad at the Essex Primary Care facility will provide flexibility when imaging equipment is being replaced or repaired, or to help address imaging volumes.

Cost, Access, Quality: The Project will improve access and quality of care. The new CT scanner has advanced capabilities and produces high-quality imaging, reducing the need for follow-up and multiple scans. It can be used for bariatric patients and has advanced cardiac capabilities including better imaging of blood vessels (CT angiography). In addition, it may reduce the costs of care in the long term by earlier detection and treatment of injury and illness.

The CT replacement and associated renovations were included in UVMMC's FY22 hospital budget submission. The mobile pad addition was included in the FY23 submission.

Location: UVMMC Main Campus and the Essex Primary Care Facility

Service Area: The service area includes UVMMC (Vermont and Northern New York)

We look forward to working with you in the review process for this application.

Sincerely,

Amanda S. Angell
Assistant General Counsel

cc: Stephen Leffler, M.D.

STATE OF VERMONT
GREEN MOUNTAIN CARE BOARD

In re:	The University of Vermont Medical Center Inc.	)
	Application for Certificate of Need for Replacement of	)
	CT Equipment with Associated Room Renovations,	)
	And Construction of Mobile Pad Addition to the	)
	Essex Primary Care Facility	)

STEPHEN M. LEFFLER, M.D., being duly sworn, states on oath as follows:

1. My name is Stephen M. Leffler, M.D. I am the President and Chief Operating Officer of The University of Vermont Medical Center Inc. I have reviewed the foregoing Certificate of Need Application.

2. Based on my personal knowledge, after diligent inquiry, the information contained in the Application is true, accurate and complete, does not contain any untrue statement of a material fact, and does not omit to state a material fact necessary to make the statement made therein not misleading, except as specifically noted herein.

3. My personal knowledge of the truth, accuracy and completeness of the information contained in the Application is based upon either my actual knowledge of the subject information or, where identified below, upon information reasonably believed by me to be reliable and provided to me by the individuals identified below who have certified that the information they have provided is true, accurate and complete, does not contain any untrue statement of a material fact, and does not omit to state a material fact necessary to make the statement made therein not misleading.

4. I have evaluated, within the 12 months preceding the date of this affidavit, the policies and procedures by which information has been provided by the certifying individuals identified below, and I have determined that such policies and procedures are effective in ensuring that all information submitted or used by The University of Vermont Medical Center Inc. in connection with the Certificate of Need program is true, accurate, and complete. I have disclosed to the Board of Trustees all significant deficiencies, of which I have personal knowledge after diligent inquiry, in such policies and procedures, and I have disclosed to the Board of Trustees any misrepresentation of facts, whether or not material, that involves management or any other employee participating in providing information submitted or used by The University of Vermont Medical Center Inc. in connection with the Certificate of Need program.

5. The following certifying individuals have provided information or documents to me in connection with the Application, and each such individual has certified, based on his actual knowledge of the subject information or, where specifically identified in such

certification, based on information reasonable believed by the certifying individual to be reliable, that the information or documents they have provided are true, accurate and complete, do not contain any untrue statement of a material fact, and do not omit to state a material fact necessary to make the statement made therein not misleading:

(a) Peter Bero, Sr. Project Manager, Facilities, UVMMC. This individual certified as to the accuracy of construction information submitted with the Application.

(b) Paula Gonyea, Network VP, Radiology. This individual certified as to the accuracy of the clinical information submitted in the Application.

(c) Joanna Lemieux, Network Strategic Planning Consultant. This individual certified to the accuracy of financial information submitted in the Application.

6. In the event that the information contained in the Application becomes untrue, inaccurate or incomplete in any material respect, I acknowledge my obligation to notify the Green Mountain Care Board, and to supplement the Application, as soon as I know, or reasonably should know, that the information or document has become untrue, inaccurate or incomplete in any material respect.

STEPHEN M. LEFFLER, M.D.

On September 28 2022, STEPHEN M. LEFFLER, M.D. appeared before me and swore to the truth, accuracy and completeness of the foregoing.

Marie McHenry

Notary Public
My commission expires 1-31-2023

Notary Public State of Vermont

Marie McHenry

Commission
No. 157.0005167

STATE OF VERMONT
GREEN MOUNTAIN CARE BOARD

CERTIFICATE OF NEED APPLICATION

by

THE UNIVERSITY OF VERMONT MEDICAL CENTER INC.

for the

REPLACEMENT OF CT EQUIPMENT WITH ASSOCIATED ROOM RENOVATIONS AND CONSTRUCTION OF MOBILE PAD ADDITION TO THE ESSEX PRIMARY CARE FACILITY

September 28, 2022

TABLE OF CONTENTS

SECTION I: PROJECT OVERVIEW

- **A. Project Summary** 1
- **B. Project Need** 1
- **C. Project Description** 4
- **D. Project Finances** 7

SECTION II: CONSISTENCY WITH CON STATUTORY CRITERIA 10

CONCLUSION 17

INDEX OF EXHIBITS 18

- **Exhibit 1: CON Financial Tables** 19
- **Exhibit 2: FGI Guidelines Chart** 36
- **Exhibit 3: Site/Floor Plan McClure Level 1** 75
- **Exhibit 4: Site/Floor Plan Essex Primary Care Mobile Pad** 83
- **Exhibit 5: Price Quote** 98

SECTION I: PROJECT OVERVIEW

A. PROJECT SUMMARY

The University of Vermont Medical Center Inc. ("UVMMC" or "the applicant") submits this Certificate of Need ("CON") application to the Green Mountain Care Board ("GMCB" or "the Board") pursuant to 18 V.S.A. § 9434(b)(2) and GMCB Rule 4.000. The applicant is seeking a CON for a project comprised of two components: (1) replacement of the existing Computed Tomography (CT) equipment located in McClure Level 1, Room 1079 (CT Room 2) and associated room renovations; and (2) construction of a mobile pad addition to the Essex Primary Care facility to house a rented mobile CT scanner during renovation and equipment replacement on the UVMMC Main Campus.

The project would replace UVMMC's oldest CT scanner. Now in its 17th year of service, the Philips Brilliance CT (Brilliance CT) has reached the end of its service life, is experiencing image deterioration, uses outdated technology that raises service and maintenance concerns, and cannot accommodate bariatric patients due to the size of the unit's bore. UVMMC plans to replace the 64-slice Brilliance CT with a 256-slice Philips Spectral CT 7500 (Spectral CT) scanner. The Spectral CT provides superior imaging quality that may reduce the need for follow-up or multiple scans, has advanced cardiac capabilities including better imaging of blood vessels (CT angiography), and has a larger bore that can accommodate patients from pediatric to bariatric and low table (wheelchair) height, allowing for a better patient experience. The project will include associated renovations necessary to prepare the space for the new scanner.

The project also includes the construction of an addition to UVMMC's Essex Primary Care facility to house a mobile CT trailer rental that will be used to absorb some of the volume while the Spectral CT is being installed and renovations are performed. Following project completion, the mobile pad will be used to house mobile imaging trailers including CT, MRI, and PET on a short-term basis as capacity needs arise.

UVMMC does not anticipate additional volumes attributable to the project. The project will not require additional FTEs or increased employee hours.

The total project cost is $3.46M, which includes approximately $1.9M in equipment costs, $556k for facilities costs on the Main Campus, $945k in costs related to the Essex mobile pad, and $55k in capitalized interest. The construction period is expected to last 24 weeks following CON approval and will be completed in two phases: 16 weeks for construction of the mobile pad, and eight weeks for the equipment replacement and associated renovations.

B. PROJECT NEED

Computed Tomography is a core service routinely utilized to provide 3-D images of the body and organs for surgical planning and treatment and to assist in the diagnosis of abnormalities and injuries. This project will help with the provision of timely and high quality imaging services to UVMMC patients.

Inventory:
The UVMMC Radiology Department has six CT scanners. The Brilliance CT is the hospital's last 64-slice unit, and its oldest. Installed in 2005, the unit has reached the end of its useful life. The unit's image quality has deteriorated, and its outdated technology raises concerns about ongoing service and maintenance.

UVMMC CT Scanners

Model	Type	Name / Location	Patient Types	Install Date	Hours of Operation	FY21 Scans	
Ingenuity CT	128 slice	CT1: McClure 1	IP/OP	12/30/2012	8AM- 11PM M-F	10,145	
Brillance CT	64 slice	CT2: McClure 1	IP/OP	9/29/2005	8AM- 8PM M-F	3,778	To be Replaced
Brillance iCT	256 slice	CT3: ACC WP 1 (ED)	IP/OP	5/19/2009	24 x 7	28,584	
Brillance iCT SP	128 slice	CT4: ACC 4	OP	12/7/2009	8AM-4:30PM M-F	2,257	
Ingenuity CT	128 slice	CT5: Fanny Allen	OP	5/30/2013	8AM-4:30PM M-F	5,643	
Brillance iCT	256 slice	CT6: ACC WP 1 (ED)	IP/OP	Nov 2020	24 x 7	5,631	
					Total FY21	***56,038***	

Historical and Projected Volumes:
Between FY16 and FY21, volumes at UVMMC grew nearly 30%—from 43,365 to 56,038 per year—driven largely by an aging population, increasing demand, and higher patient acuity across all service lines.

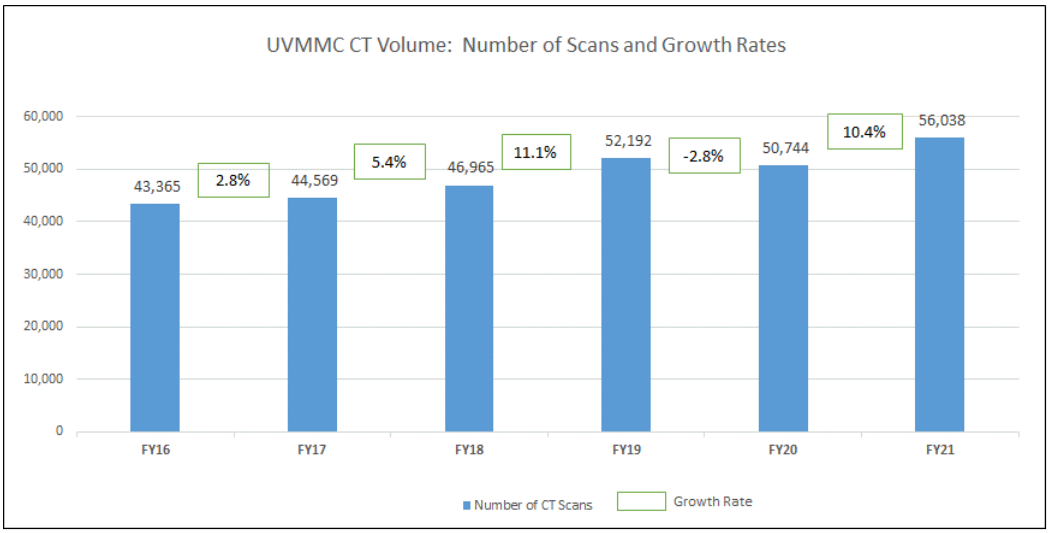

The number of CT scans for the inpatient population grew by almost 45% between FY19 and FY21, driving an overall volume growth of 7.4%:

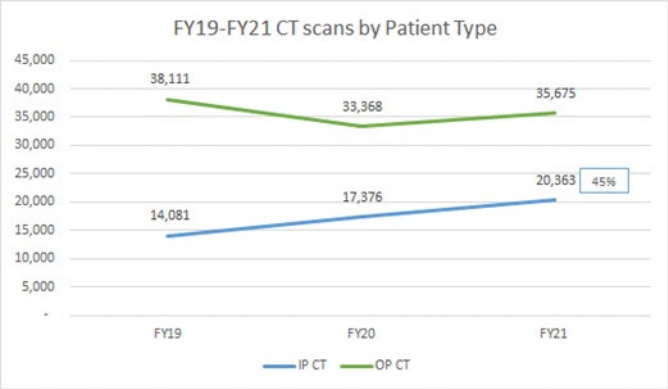

In FY19, all five UVMMC CT scanners performed above the national benchmark (note that CT6 was not installed until November 2020). In FY20, however, volumes were impacted by COVID-19 and CT4, a designated outpatient scanner, was closed and staff was consolidated to work on the other scanners. The impact is reflected in the following graph.

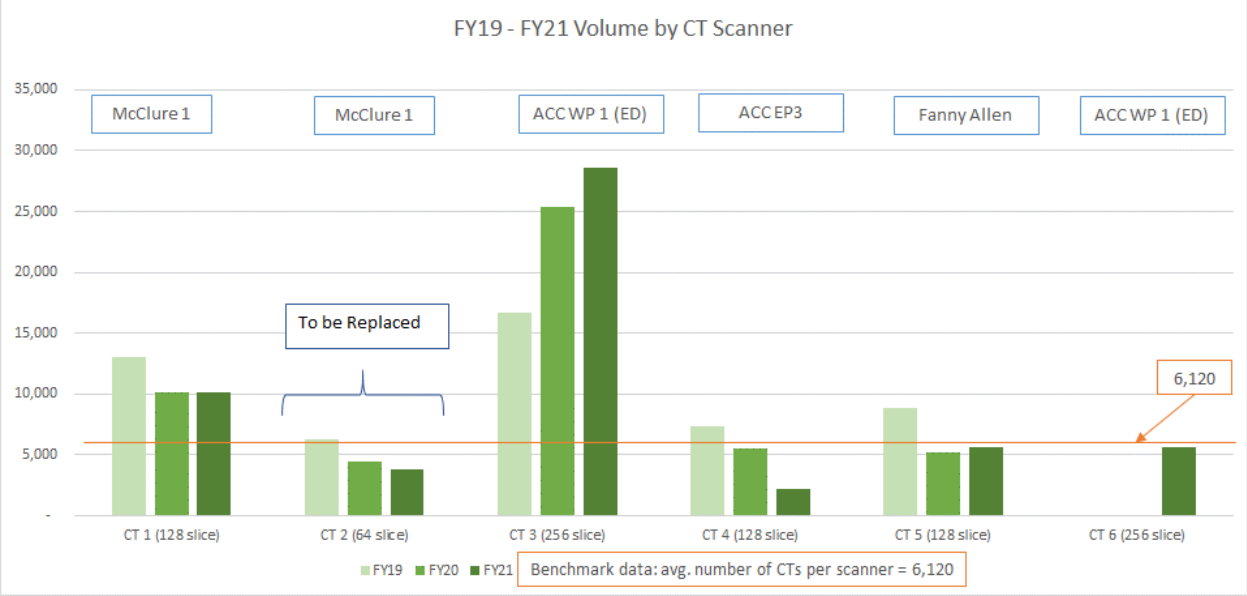

Notwithstanding disruption in services caused by the pandemic, strong historical growth in volumes is projected to continue; consultant Sg2's population adjusted forecast[1] shows 31% growth in CT scans in the Burlington HSA over the next decade.

[1] UVMMC subscribes to national consultancy group Sg2's database and analytics tool to generate demand projections for business planning and CON applications. Sg2's population utilization impact factor for the 65+ demographic was adjusted to reflect a higher growth rate in the service region from 2020 to 2030, as forecast by Public Opinion Strategies' demographic forecast. The methodology is consistent with UVMMC's July 21, 2021 budget submission and was outlined in Exhibit 1 of the applicant's Demand Model Supporting UVMMC's Upcoming CON Application to Develop an Outpatient Surgery Center, filed with the GMCB on December 28, 2021.

UVMMC plans to address the need for additional capacity to meet projected growth as part of its Master Facility Plan currently being developed, which will make recommendations regarding facilities to house additional imaging with key adjacent healthcare services.

Replacement of the Brilliance CT with the Spectral CT:
The Brilliance CT was placed in operation in 2005 and is experiencing image deterioration. Its technology is outdated, raising servicing and maintenance concerns. The size of its bore does not accommodate bariatric patients.

This project would replace the Brilliance CT with a 256-slice, Philips Spectral CT 7500 scanner. The new unit will be UVMMC's most advanced CT technology. The Spectral CT provides superior images and can accommodate patients from pediatric to bariatric. It can produce images with and without contrast agents using a single scan instead of two separate scans; in addition, spectral data improves tissue characterization and visualization and may reduce the need for follow-up scanning. Its advanced cardiac capabilities (cardiac CT angiography) allow spectral imaging for more types of patients. The Spectral CT may also improve image quality if patients have metal in the area scanned (e.g., joint replacements).

Short-term Mobile CT Rental and Mobile Pad:
For continued patient access during the equipment replacement and associated renovations, a GE VCT 64-slice mobile scanner will be rented and located at the proposed mobile pad addition at Essex Primary Care. The mobile pad will allow UVMMC to continue to address the backlog and increased demand for services. Importantly, the pad can accommodate other types of mobile imaging equipment (e.g., MRI, PET), giving UVMMC the ability to provide temporary capacity during future equipment replacements and providing a short-term solution to radiology needs.

C. PROJECT DESCRIPTION

1. McClure Level 1, Room 1079 (CT Room 2)

Equipment: UVMMC plans to purchase a Philips Spectral CT 7500 to replace the existing Philips Brilliance unit. The purchase includes the scanner, table assembly, and equipment support cabinets. The existing scanner will be removed by a rigging company. The costs of the new equipment and removal of the old equipment are reflected in the financial tables.

Facilities: The new equipment will be installed in McClure Level 1, Room 1079 (CT Room 2), replacing the Brilliance CT scanner now in that space. The installation includes the scanner and table assembly, along with the required support equipment for CT imaging procedures. An existing uninterrupted power supply (UPS) that currently serves CT Rooms 1 and 2 will support the new CT Room 2 equipment. A new, smaller UPS will be purchased and installed to serve the existing CT Room 1 equipment.

Facility renovations will be required as part of the project. Currently, the equipment in CT Room 2 is supported by an adjacent CT tech control room (McClure Level 1, Room 1089) and support equipment closet (McClure Level 1, Room 1079A). As shown below, changes are also planned for neighboring Rooms 1078A, 1081 and 1083 to accommodate the installation:

McClure Level 1 Room Designation	Existing Room Function	Proposed Room Function
Room 1079	CT main imaging room	CT main imaging room
Room 1089	CT tech control room	CT tech control room
Room 1079A	CT support equipment closet	Room 1079A and 1078A will be combined to form the necessary larger CT support equipment closet
Room 1078A	CT staff breakroom	Room 1079A and 1078A will be combined to form the necessary larger CT support equipment closet
Room 1081	CT general circulation space	CT staff breakroom
Room 1083	CT storage space	CT storage space with designated area to install new UPS to serve existing CT Room 1

The project will require upgrades to architectural, mechanical HVAC, electrical, and plumbing systems within each space. All proposed upgrades have been reviewed to ensure that applicable construction standards are met and that the upgrades are in compliance with the FGI Guidelines for Design and Construction of Hospitals (FGI Guidelines). A table showing each relevant guideline, with proposed upgrade, is attached as Exhibit 2.

The cost for the new equipment, supporting mechanical HVAC, electrical, and plumbing, necessary renovation of adjacent support space, furnishings, fixtures and other equipment, including the UPS to support CT Room 1, are included in the financial section of this application.

Floor plans of McClure Level 1 are attached as Exhibit 3.

2. <u>Essex Primary Care Mobile Pad Addition</u>

<u>Equipment</u>:
UVMMC will rent a GE VCT 64-slice mobile CT scanner that will be placed at the proposed mobile pad addition at Essex Primary Care for use while the Spectral CT is being installed and associated renovations made. The rental and employee training costs, *see* subsection 6, below ("Staffing"), are included in the project financial tables, attached as Exhibit 1.

<u>Facilities</u>:
UVMMC will construct the mobile pad in advance of the CT equipment replacement and renovations on the Main Campus. The Essex Primary Care site was determined to be the best location to house a mobile radiology unit; constructed in 2020, it was designed with ample

parking and space to accommodate potential expansion. The Essex facility is centrally located in Chittenden County with good access by car and public transportation (Green Mountain Transit).[2] The addition will consist of a general mobile trailer access space, as well as storage/prep room and changing space. The addition will include a partial mobile trailer enclosure to provide aesthetic benefit from the adjacent VT Route 15. The addition has been designed to accommodate a variety of mobile imaging units, including MRI, CT, and PET mobile trailers. The project is depicted below, and floor plan included as Exhibit 4.

Essex Primary Care with proposed mobile addition:

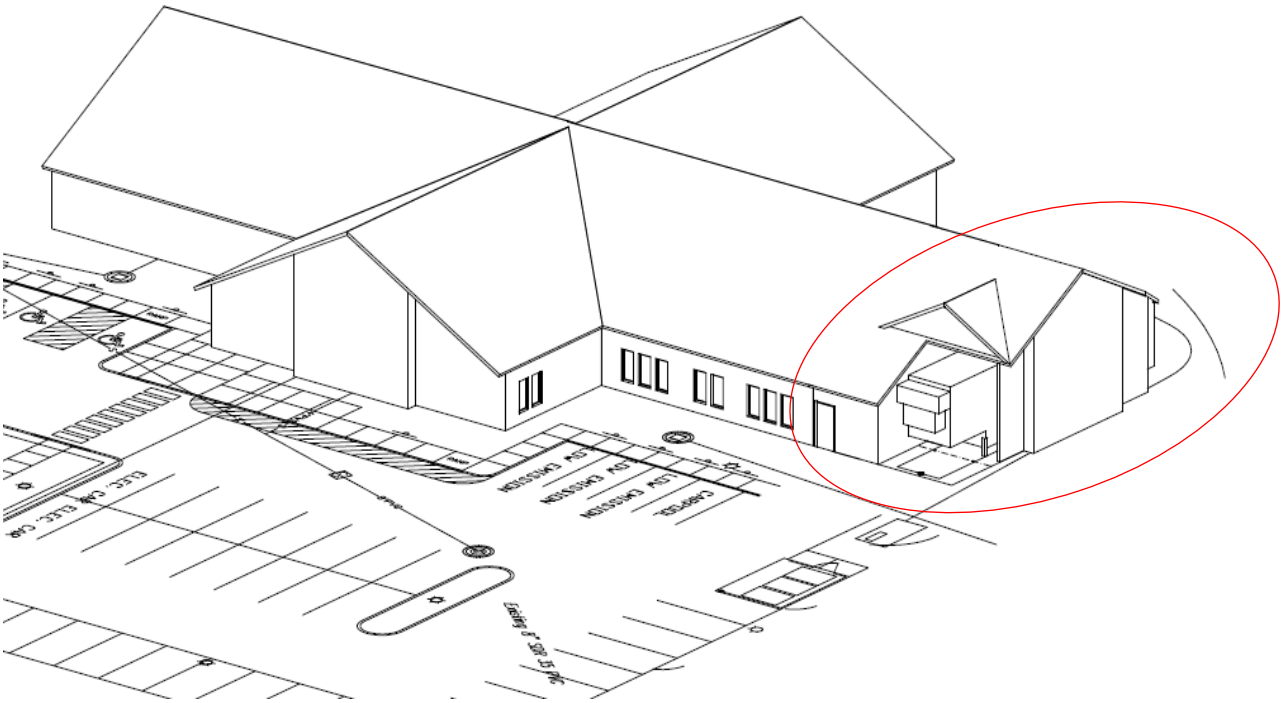

Significant architectural, mechanical HVAC, electrical and plumbing systems will be required for the addition. These necessary systems will ensure patient and staff comfort while meeting all necessary code and FGI guidelines requirements. The cost for the addition, supporting mechanical HVAC, electrical and plumbing, furnishings, fixtures and other equipment are included in the financial assessment. *See* Exhibit 1.

[2] The applicant met CON criterion 6 (consideration of affordable, accessible transportation services) for this location in the 2019 CON for the Essex Primary Care replacement building, docket no. GMCB 001-19con (May 31, 2019).

Although the addition is small, extensive permitting is required at the Local and State Level. UVMMC has identified all potential permitting requirements, listed below, and will work with Local and State officials to ensure timely approvals:

- Town of Essex Site Plan Amendment and Zoning permit
- State Stormwater Operational Permit
- State Division of Fire Safety Construction Permit

3. Hours of Operation

UVMMC expects that the new CT scanner will be in operation during the same hours as the existing scanner, from 8 a.m. to 8 p.m., Monday through Friday. *See* Section 1, B (chart shows hours of operation for all scanners). The mobile unit at the Essex Primary Care facility will be open during the same hours as the Essex facility.

4. Energy Systems/Efficiency

UVMMC will work with Efficiency Vermont to ensure that energy efficient design, systems and products are selected for all project renovation and construction. UVMMC anticipates using energy efficient LED lighting to meet general and clinical imaging illumination requirements. HVAC equipment will be commissioned in accordance with FGI Guidelines, and the applicant will use available technology to reduce energy consumption while ensuring a comfortable environment for patients and staff.

5. Access to Public Transportation

Both the UVMMC Main Campus and the Essex Primary Care facility are served by Green Mountain Transit.

6. Staffing

This project includes no additional FTEs. FTEs assigned to work in CT Room 2 on the existing equipment will be trained to perform scans on the mobile CT unit at Essex Primary Care during installation of the new unit and associated renovations. The training will take approximately three days and will be performed during normal operating hours with minimal impact on patients. Training costs are included in the financial assessment.

7. Information Technology

There are no technical obstacles with the Philips Spectral 7500 CT's connectivity to the UVMMC network. The equipment will utilize the same Picture Archiving and Communication System (PACS) as the current equipment which has an established interface with Epic. UVMMC expects that there will be no impact on Epic or additional interfacing required by the project.

D. PROJECT FINANCES

A financial analysis including a capital and depreciation schedule, 5-year incremental pro forma, P&L, cash flow, and net present value calculation was performed:

1. Capital Cost: The capital expense for this project is approximately $3.46M, which includes $2.5M for the Main Campus renovation, equipment replacement component and capitalized interest, and $945k for the Essex Primary Care Mobile Pad.

Capital Expense Summary: Spect CT

Capital Costs	
Facilities	$ 1,536,247
Equipment (CT Scanner)	$ 1,865,228
IT	$ -
Other	$ -
Total	**$ 3,401,475**
Capitalized Interest	
Interest	$ 55,453
Total	**$ 55,453**
Grand Total	**$ 3,456,928**

Capital Costs	Main Campus	Essex Mobile Pad
Facilities	$ 590,946	$ 945,300
Equipment (CT Scanner)	$ 1,865,228	
IT	$ -	
Other	$ -	
Total	**$ 2,456,174**	**$ 945,300**
Capitalized Interest		
Interest	$55,453	
Total	**$55,453**	
Grand Total	**$3,456,928**	

Facilities costs are shown below:

Cost Category	Main Campus	Essex Mobile Pad
Renovation	$ 400,000	$ -
New Construction	$ -	$ 522,000
Furnishings, Fixtures, and Other Equipment	$ 31,880	$ 27,000
Architectural / Engineering Fees	$ -	$ 191,540
Administrative Expenses and Permits	$ 3,066	$ 1,180
Design/Bidding Contingency	$ 76,000	$ 99,180
Construction Contingency	$ 80,000	$ 104,400
Total Facilities Costs	**$ 590,946**	**$ 945,300**

2. Depreciation: The facilities portion of the capital expense will be depreciated over 20 years. The equipment cost will be depreciated over five years.

Depreciation Schedule	Y1	Y2	Y3	Y4	Y5	Y6	Y7	....	Y20	TOTAL
Facilities	$ 79,585	$ 79,585	$ 79,585	$ 79,585	$ 79,585	$ 79,585	$ 79,585		$ 79,585	*$ 1,591,700*
Equipment (CT Scanner)	$ 373,046	$ 373,046	$ 373,046	$ 373,046	$ 373,046	$ -	$ -		$ -	*$ 1,865,228*
IT	$ -	$ -	$ -	$ -	$ -	$ -	$ -		$ -	*$ -*
Other	$ -	$ -	$ -	$ -	$ -	$ -	$ -		$ -	*$ -*
Total	***$ 452,631***	***$ 452,631***	***$ 452,631***	***$ 452,631***	***$ 452,631***	***$ 79,585***	***$ 79,585***		***$ 79,585***	***$ 3,456,928***

3. Incremental Margin Contribution Impact: Since this project is a replacement of the current equipment, the Incremental Pro Forma Statement of Operations, shown below, reflects:
    a. No new revenue or loss of revenue as a result of the project.
    b. The new service contract for Spectral CT starts in Y2.
    c. Depreciation cost of approximately $453k annually.
    d. The short-term mobile CT rental cost includes training.

Incremental Pro-Forma

	Y1	Y2	Y3	Y4	Y5	*5 Yr. Total*
Expenses						
Sub-Total Scanner Related Op. Expense	**$ 431,421**	**$ 524,117**	**$ 524,117**	**$ 524,117**	**$ 524,117**	***$ 2,527,887***
Depreciation & Amortization	*$ 452,631*	*$ 452,631*	*$ 452,631*	*$ 452,631*	*$ 452,631*	*$ 2,263,153*
Service Contract		*$ 161,696*	*$ 161,696*	*$ 161,696*	*$ 161,696*	*$ 646,784*
Mobile CT Rental	*$ 69,000*					*$ 69,000*
Cost offsets (Current Service Contract)	$ (90,210)	$ (90,210)	$ (90,210)	$ (90,210)	$ (90,210)	*$ (451,050)*
Total Expenses	**$ 431,421**	**$ 524,117**	**$ 524,117**	**$ 524,117**	**$ 524,117**	***$ 2,527,887***
Margin from Operations						
Margin from Operations	**$ (431,421)**	**$ (524,117)**	**$ (524,117)**	**$ (524,117)**	**$ (524,117)**	***$ (2,527,887)***

4. The Net Present Value Summary shows a net present value of approximately ($3.46M) over five years.

Project only Cash Flow and Net Present Value (NPV): UVMMC CT Scanner Replacement and Short-term Mobile CT rental

	Y1	Y2	Y3	Y4	Y5	5 Yr. Total
Margin from Operations	$ (431,421)	$ (524,117)	$ (524,117)	$ (524,117)	$ (524,117)	***$ (2,527,887)***
Depreciation	$ 452,631	$ 452,631	$ 452,631	$ 452,631	$ 452,631	***$ 2,263,153***
Capital Expense	$ (3,401,475)					***$ (3,401,475)***
Cash Flow	$ (3,380,265)	$ (71,486)	$ (71,486)	$ (71,486)	$ (71,486)	***$ (3,666,209)***
Net Present Value	($3,460,715)					

SECTION II: CONSISTENCY WITH 18 V.S.A. § 9437

The project meets each statutory criterion, which are addressed, in bold type, below:

1. **The proposed project aligns with statewide health care reform goals and principles because the project:**
   - **(A) takes into consideration health care payment and delivery system reform initiatives;**
   - **(B) addresses current and future community needs in a manner that balances statewide needs, if applicable; and**
   - **(C) is consistent with appropriate allocation of health care resources, including appropriate utilization of services, as identified in the HRAP pursuant to section 9405 of this title.**

The project meets this criterion and aligns with the Triple Aim.[3] Computed Tomography is a key diagnostic tool that helps medical providers confirm the presence or absence of abnormalities and disease. The new 256-slice Philips Spectral scanner will provide superior imaging compared to its 64-slice predecessor. It can produce images with and without contrast agents using a single scan instead of two separate scans; in addition, spectral data improves tissue characterization and visualization and may reduce the need for follow-up scanning. The Spectral CT may also improve image quality if patients have metal in the area scanned (e.g., joint replacements). The unit's more precise image capture can lead to early detection, monitoring and treatment of disease and illness, in turn leading to better outcomes, lower mortality, and improved population health.

The Spectral CT can also accommodate a wider range of patients. The Spectral CT has advanced cardiac capabilities, including better imaging of blood vessels (CT angiography), allowing spectral imaging for more types of patients. Its bore can accommodate bariatric patients – the Philips Brilliance cannot – and its low table provides better patient experience for individuals in wheelchairs.

The project also meets each of the relevant HRAP standards, as explained below:

<u>CON Standard 1.6</u>: Applicants seeking to develop a new health care project shall explain how the applicant will collect and monitor data relating to health care quality and outcomes related to the proposed new health care project. To the extent practicable, such data collection and monitoring shall be aligned with related data collection and monitoring efforts, whether within the applicant's organization, other organizations or the government.

The UVMMC Radiology Department follows a quality assurance/quality improvement program consistent with Joint Commission standards, including Performance Improvement (PI) Standards

[3] The Triple Aim of the Institute of Healthcare Improvement (IHI) framework includes:
- Improving the patient experience of care;
- Improving the health of populations; and
- Reducing the per capita cost of health care.

PI.01.01.01 (requires hospitals to collect data to monitor their performance), and LD.03.02.01 (requires hospitals to use data and information to guide decisions and to understand variation in the performance of processes supporting safety and quality). The Department collects, analyzes and reports data in order to investigate and evaluate risks and potential risks to patient safety, and to develop action plans to reduce any risks that are identified.

A Radiology Quality Committee charged with evaluating and improving the quality of care meets bi-monthly. The Committee identifies and improves systems and processes that promote quality outcomes and patient safety; oversees monitoring activities intended to assess whether radiology services rendered were professionally indicated and performed in compliance with applicable standards of care; and reviews and recommends actions based on quality metric reports.

CON Standard 1.7: Applicants seeking to develop a new health care project shall explain how such project is consistent with evidence-based practice. Such explanation may include a description of how practitioners will be made aware of evidence based practice guidelines and how such guidelines will be incorporated into ongoing decision making.

UVM Medical Center is a leading academic medical center providing graduate medical education based on a philosophy of evidence-based practice, which is committed to delivering high quality patient care using evidence-based protocols. Most of UVMMC's staff physicians both practice and teach healthcare. UVMMC providers make decisions regarding the appropriate and effective use of imaging with reference to the American College of Radiology's ACR Appropriateness Criteria®.[4]

CON Standard 1.9: Applicants proposing construction projects shall show that costs and methods of the proposed construction are necessary and reasonable. Applicants shall show that the project is cost-effective and that reasonable energy conservation measures have been taken.

This project is primarily focused on the replacement of diagnostic equipment and associated renovations in existing space on the Main Campus. The renovation work is necessary to accommodate the new CT unit, which will be installed in the same room as the unit it is replacing, thereby minimizing its costs.

The project also includes construction of an addition to the Essex Primary Care facility to house a mobile CT unit. The mobile unit is needed to provide additional patient access to CTs while the replacement unit is being installed on the Main Campus, and to help address the current backlog. Importantly, it will remain available after project completion to house other types of mobile imaging trailers as needed in the future. Its cost of approximately $945k, including design,

[4] The criteria "are evidence-based guidelines to assist referring physicians and other providers in making the most appropriate imaging or treatment decision for a specific clinical condition." The guidelines are developed and updated annually by leading experts in radiology and other specialties. *See* https://acr.org/Clinical-Resources/ACR-Appropriateness-Criteria/About-the-ACR-AC.

permitting and contingencies, is reasonable considering its ongoing functionality and flexibility. (Note that this component would not have triggered CON review if not associated with the equipment replacement project.)

Energy conservation measures are addressed in Standard 1.10, below.

<u>CON Standard 1.10</u>: Applicants proposing new health care projects requiring construction shall show such projects are energy efficient. As appropriate, applicants shall show that Efficiency Vermont, or an organization with similar expertise, has been consulted on the proposal.

This project is primarily focused on the replacement of diagnostic equipment and associated renovations in existing space on the Main Campus. It also includes construction of an addition to the Essex Primary Care facility to house a mobile CT unit. The applicant will work with Efficiency Vermont to ensure that energy efficient design, systems and products are selected for all project renovation and construction. UVMMC anticipates using energy efficient LED lighting to meet general and clinical imaging illumination requirements. HVAC equipment will be commissioned in accordance with FGI Guidelines, *see* Exhibit 2, and the applicant will use available technology to reduce energy consumption while ensuring a comfortable environment for patients and staff.

<u>CON Standard 1.11</u>: Applicants proposing new health care projects requiring new construction shall demonstrate that new construction is the more appropriate alternative when compared to renovation.

The focus of the CON is replacement of the outdated CT scanner, with associated renovations of CT Room 2 and adjoining areas. Limited construction will take place at Essex Primary Care to build a pad that can accommodate a mobile CT unit while work is being done at the Main Campus, as well as at other times when additional imaging capacity is needed. *See* CON Standard 1.9 (discussion of the mobile pad construction at Essex Primary Care).

<u>CON Standard 1.12</u>: New construction health care projects shall comply with the Guidelines for Design and Construction of Health Care Facilities as issued by the Facility Guidelines Institute (FGI), 2018 edition.

UVMMC is accredited by the Joint Commission and therefore required to follow the FGI Guidelines as a condition of accreditation. Exhibit 2, attached, contains a detailed table showing each relevant FGI Guideline and a description of how the project satisfies the relevant guideline.

<u>CON Standard 3.4</u>: Applicants subject to budget review shall demonstrate that a proposed project has been included in hospital budget submissions or explain why inclusion was not feasible.

Capital for the CT equipment replacement and renovation was reserved in the FY22 capital budget. Capital for the new mobile addition at Essex Primary Care has been requested in the FY23 capital budget.

<u>CON Standard 3.6</u>: Computed tomographic (CT) scanning capacity shall not be increased until current capacity is in excess of valid state, regional and/or national benchmarks for medically necessary exams per year and sufficient additional need is demonstrated based on such benchmarks. An applicant proposing a project involving CT shall provide information on current use, document the effectiveness of the internal program utilized by the applicant to prevent overuse, and verify that the applicant does not have financial incentives in place to encourage CT utilization.

The project is a straight replacement of equipment that is outdated and has reached the end of its service life. The project will not drive an increase in volumes.

UVMMC providers make decisions regarding the appropriate and effective use of imaging with reference to the American College of Radiology's ACR Appropriateness Criteria®, which are evidence-based guidelines to assist providers in making the most appropriate imaging or treatment decision for specific clinical conditions. The applicant also has systems and procedures in place to avoid unnecessary or duplicative testing, and the new equipment's more advanced technology and capabilities may in some instances eliminate the need for multiple or follow-up scans.

The applicant does not have financial incentives in place to encourage CT utilization.

<u>CON Standard 3.7</u>: Applicants proposing to replace diagnostic or therapeutic equipment shall demonstrate that existing equipment is fully depreciated, or the cost of the early replacement, including the cost of the remaining depreciation on existing equipment, is less costly than keeping the existing equipment.

The existing CT scanner was placed in operation in 2005 and is fully depreciated.

<u>CON Standard 3.19</u>: An applicant seeking to purchase a piece of diagnostic or therapeutic equipment shall include an analysis of whether other health care system costs may be reduced through more effective interventions through the use of the equipment. As appropriate, hospitals shall provide scientific evidence supporting the migration of such equipment and technology outside of tertiary care facilities.

UVMMC is a tertiary/quaternary hospital serving approximately one million people in Vermont and Northern New York. Its use of diagnostic imaging equipment such as the Spectral CT is essential to the delivery of high quality patient care in the region. Its purchase is needed to meet current and projected CT volumes. In addition, reduced wait times, elimination of multiple scans and an expanded patient pool, as well as more accurate, higher-resolution imaging and enhanced capabilities, can create indirect savings as a result of earlier disease diagnoses and treatment.

<u>CON Standard 3.20</u>: Applications to purchase diagnostic or therapeutic equipment, or to expand facilities to accommodate major medical equipment purchases, shall address the appropriateness of such distribution as compared to population, the availability of appropriately trained personnel, an evaluation of patient need versus convenience, urgent versus non-urgent use, and appropriate protocol to reduce the risk of repetitive testing (both within the facility purchasing the equipment and within the health care system).

The project replaces existing equipment, and allows the applicant to continue offering services, through use of a mobile CT rental unit, during the replacement and renovation period on the Main Campus.

The project requires no new FTEs, and the applicant will train current staff to operate the mobile equipment during the period that CT Room 2 is unavailable. As previously discussed in CON Standard 3.6, UVMMC providers will continue to use established professional standards and protocols to ensure appropriate and effective use of the equipment.

CON Standard 3.22: For applications involving the purchase of diagnostic or therapeutic equipment, applicants shall establish, through the submission of evidence in the form of peer-reviewed or similar articles, the clinical efficacy of the diagnoses or procedures to be performed.

The project is the straight replacement of equipment that is outdated and no longer performing optimally. It does not introduce a new (or novel) service.

CT scanning is considered one of the most important technological advances in recent medical history (its inventors were awarded the Nobel Prize in Medicine in 1979.) The technology uses a series of x-rays, taken from different angles, to provide detailed, cross-sectional images (slices) of the inside of the body. The technology is widely used to diagnose muscle and bone disorders; pinpoint the location of tumors, infections, or blood clots; guide procedures such as surgery, biopsy and radiation therapy; detect internal injuries or bleeding; detect and monitor such conditions including cancer, heart disease, lung nodules and liver masses; and to monitor certain treatments' effectiveness. When used appropriately and pursuant to standards and protocols, *see* CON Standards 1.6, 1.7, its benefits "far exceed" its risks. *See* https://www.fda.gov/radiation-emitting-products/medical-x-ray-imaging/computed-tomography-ct.

CON Standard 3.23: In addition to proving need, applicants seeking to add or expand diagnostic or therapeutic equipment shall show that the equipment reduces costs and/or improves quality.

The new equipment is not an addition or expansion of services, but will nonetheless improve quality and potentially lower costs. The Spectral CT will provide more advanced and precise imaging than the Brilliant CT, in some cases eliminating the need for multiple or follow-up scans, and the costs associated with them. It can also improve quality and reduce costs through early detection, monitoring and treatment of injury and disease, leading to better outcomes.

Further, the new mobile pad at the Essex Primary Care facility can provide additional availability of mobile imaging services when needed to address increased volumes, and when outdated or inoperable equipment needs to be replaced or serviced.

CON Standard 3.24: An applicant shall disclose potential financial conflicts of interest between hospitals and physicians and an equipment purchase.

There are no known or perceived conflicts of interest between the hospitals and physicians, and the vendor or manufacturer of this equipment.

2. **The cost of project is reasonable, because each of the following conditions is met:**
   - **(A) The applicant's financial condition will sustain any financial burden likely to result from completion of the project.**
   - **(B) The project will not result in an undue increase in the costs of medical care or an undue impact on the affordability of medical care for consumers. In making a finding under this subdivision, the Board shall consider and weigh relevant factors, including:**
     - **(i) the financial implications of the project on hospitals and other clinical settings, including the impact on their services, expenditures and charges; and**
     - **(ii) whether the impact on services, expenditures, and charges is outweighed by the benefit of the project to the public.**
   - **(C) Less expensive alternatives do not exist, would be unsatisfactory, or are not feasible or appropriate.**
   - **(D) If applicable, the applicant has incorporated appropriate energy efficiency measures.**

The project's impact on UVMMC's operating margin will be minimal. The project will not create an unsustainable financial burden or adversely impact UVMMC's financial health. Nor will the project result in an undue increase in the costs of care or adversely impact affordability for consumers.

The equipment currently in operation is 17 years old and at the end of its useful life, raising concerns for its ongoing maintenance and servicing. The need for CT scans is increasing, *see* Section 1, B, and the current backlog could worsen without timely replacement of the existing equipment. As technology has improved, the Spectral CT will provide better quality care and increased patient access its larger bore can accommodate bariatric patients, for example and its precise imaging may eliminate the need for multiple or follow-up scans. These benefits, and the potential for earlier detection and diagnosis of disease and illness, can translate into cost savings over time.

There are no less expensive, satisfactory alternatives to replacing the existing CT equipment. The new 256-slice Spectral CT was selected based on its advanced technology and is an appropriate upgrade of the 17-year old Brilliance CT. The Spectral CT will provide superior, high-resolution imaging, and may lead to earlier and more accurate diagnosis, monitoring and treatment of injury and disease. The new equipment will be installed in the same room as the existing equipment, minimizing costs and overall facility disruption. In addition, the mobile pad at Essex Primary Care will allow outpatient CT scans to continue while the new equipment is being installed and renovations completed. Once the project is finished, the mobile pad at the Essex Primary Care facility will help meet patient demand for imaging services (e.g., MRI, PET, CT) in the future as the need arises.

The applicant has incorporated energy efficiency measures, as discussed in CON Standard 1.10.

3. **There is an identifiable, existing, or reasonably anticipated need for the proposed project that is appropriate for the applicant to provide.**

This project replaces diagnostic equipment used for services that currently have a backlog of approximately seven weeks. Replacing the equipment now will avoid potential downtime and servicing issues relating to the outdated unit, and improve the quality of CT scans to the benefit of patients and providers. As discussed throughout the application, CT scans are widely used to diagnose, monitor, and treat injury and disease, and are an essential tool for practitioners at UVMMC. *See, e.g.*, CON Standards 3.6, 3.19, 3.22.

4. **The project will improve the quality of health care in the State or provide greater access to health care for Vermont's residents, or both.**

This project will do both. The project will update equipment that has reached the end of its useful life and does not have enhanced functionalities. The Spectral CT offers higher resolution and better quality imaging, in some cases reduces the need for multiple or follow-up scans, and is available for a wider pool of patients (CT angiography, bariatric patients). *See* Criterion 1. In addition, the availability of the mobile CT unit at Essex Primary Care, for the duration of this project and beyond, will provide flexibility and supplemental imaging capacity as needed.

5. **The project will not have an undue adverse impact on any other existing services provided by the applicant.**

Replacing the existing CT scanner with the Spectral CT will not affect other existing services provided by UVMMC.

6. **[Repealed.]**

7. **The applicant has adequately considered the availability of affordable, accessible transportation services to the facility, if applicable.**

This project is primarily located on the UVMMC Main Campus in Burlington. The Essex Primary Care facility, where the mobile pad will be constructed, received a CON in 2019 and was determined to have met this criterion, *See* Section 1, C, note 3. The facility is in Chittenden County and has good access by car and public transportation (Green Mountain Transit).

8. **If the application is for the purchase or lease of new Health Care Information Technology, it conforms with the Health Information Technology Plan established under section 9351 of this title.**

Not applicable to this project.

9. **The project will support equal access to appropriate mental health care that meets standards of quality, access, and affordability equivalent to other components of health care as part of an integrated, holistic system of care, as appropriate.**

If a patient seeking imaging at UVMMC or Essex APC expresses a need for mental health services and is not in an acute crisis, providers would refer them back to their primary care physician. The primary care offices of the UVM Health Network have mental health professionals collaborating with their medical homes. The primary care provider, working with their mental health care colleagues, would be in the best position to assess the needs and next

steps for an individual. For patients in acute crisis, providers would follow our suicide risk assessment protocol which may include contacting 911 (from Essex APC) or our internal Medical Emergency Team (at the Main Campus) to facilitate an assessment of the patient to determine appropriate care given the patient's presentation.

CONCLUSION

Based on the information contained in this application, and for all the foregoing reasons, UVMMC respectfully requests approval of the application and issuance of a CON for the project.

Dated at Burlington, Vermont this 28th day of September, 2022.

THE UNIVERSITY VERMONT MEDICAL CENTER INC.

By: _____
Amanda S. Angell
Assistant General Counsel

INDEX OF EXHIBITS

Exhibit 1: CON Financial Tables
Exhibit 2: FGI Guidelines Chart
Exhibit 3: Site/Floor Plan McClure Level 1
Exhibit 4: Site/Floor Plan Essex Primary Care Mobile Pad
Exhibit 5: Price Quote

Exhibit 1
CON Financial Tables

NOTE: When completing this table make entries in the shaded fields only.

The University of Vermont Medical Center
CT Replacement
TABLE 1
PROJECT COSTS

Construction Costs		
1. New Construction	$	522,000
2. Renovation	$	400,000
3. Site Work	$	-
4. Fixed Equipment	$	1,865,228
5. Design/Bidding Contingency	$	175,180
6. Construction Contingency	$	184,400
7. Construction Manager Fee	$	-
8. Other (please specify)	$	-
Subtotal	$	3,146,808
Related Project Costs		
1. Major Moveable Equipment	$	-
2. Furnishings, Fixtures & Other Equip.	$	58,880
3. Architectural/Engineering Fees	$	191,540
4. Land Acquisition	$	-
5. Purchase of Buildings	$	-
6. Administrative Expenses & Permits	$	4,247
7. Debt Financing Expenses (see below)	$	-
8. Debt Service Reserve Fund	$	-
9. Working Capital	$	-
10. Other (Capitalized Interest)	$	55,453
	$	-
	$	-
Subtotal	$	310,120
Total Project Costs	**$**	**3,456,928**

Debt Financing Expenses		
1. Capital Interest	$	-
2. Bond Discount or Placement Fee	$	-
3. Misc. Financing Fees & Exp. (issuance costs)	$	-
4. Other	$	-
Subtotal	$	-
Less Interest Earnings on Funds		
1. Debt Service Reserve Funds	$	-
2. Capitalized Interest Account		-
3. Construction Fund		-
4. Other		-
Subtotal	$	-
Total Debt Financing Expenses	**$**	**-**
feeds to line 7 above		

NOTE: When completing this table make entries in the shaded fields only.

The University of Vermont Medical Center

CT Replacement

TABLE 2

DEBT FINANCING ARRANGEMENT, SOURCES & USES OF FUNDS

Sources of Funds

1. Financing Instrument	Bond			
a. Interest Rate	0.0%			
b. Loan Period		To:		
c. Amount Financed			$	-
2. Equity Contribution				3,456,928
3. Other Sources				
a. Working Capital				-
b. Fundraising				-
c. Grants				-
d. Other				-
Total Required Funds			**$**	**3,456,928**

Uses of Funds

Project Costs (feeds from Table 1)		
1. New Construction	$	522,000
2. Renovation		400,000
3. Site Work		-
4. Fixed Equipment		1,865,228
5. Design/Bidding Contingency		175,180
6. Construction Contingency		184,400
7. Construction Manager Fee		-
8. Major Moveable Equipment		-
9. Furnishings, Fixtures & Other Equip.		58,880
10. Architectural/Engineering Fees		191,540
11. Land Acquisition		-
12. Purchase of Buildings		-
13. Administrative Expenses & Permits		4,247
14. Debt Financing Expenses		-
15. Debt Service Reserve Fund		-
16. Working Capital		-
17. Other (Capitalized Interest)		55,453
Total Uses of Funds	**$**	**3,456,928**

Total sources should equal total uses of funds.

THE UNIVERSITY OF VERMONT MEDICAL CENTER

CT Replacement - Table 3A

INCOME STATEMENT
Table 3A
WITHOUT PROJECT

	2020 Actual	2021 Budget	% change	2021 Projection	% change	2022 Budget	% change	Proposed Yr 1 2023	% change	Proposed Yr 2 2024	% change	Proposed Yr 3 2025	% change	Proposed Yr 4 2026	% change	Proposed Yr 5 2027	% change
REVENUES																	
INPATIENT CARE REVENUE	961,991,066	-	-100.0%	987,667,855	#DIV/0!	1,139,480,429	15.4%	1,243,173,148	9.1%	1,286,684,208	3.5%	1,331,718,155	3.5%	1,378,328,291	3.5%	1,426,569,781	3.5%
OUTPATIENT CARE REVENUE	1,199,832,825	3,266,603,970	172.3%	1,473,369,737	-54.9%	1,608,905,587	9.2%	1,755,315,995	9.1%	1,816,752,055	3.5%	1,880,338,377	3.5%	1,946,150,220	3.5%	2,014,265,478	3.5%
OUTPATIENT CARE REVENUE - PHYSICIAN	534,405,279	-	-100.0%	573,834,762	#DIV/0!	701,663,177	22.3%	765,514,526	9.1%	792,307,534	3.5%	820,038,298	3.5%	848,739,638	3.5%	878,445,525	3.5%
CHRONIC/SNF PT CARE REVENUE	22,840,995	-	-100.0%	18,965,090	#DIV/0!	35,633,122	87.9%	38,875,736	9.1%	40,236,387	3.5%	41,644,661	3.5%	43,102,224	3.5%	44,610,801	3.5%
SWING BEDS PT CARE REVENUE	-	-	#DIV/0!	-	#DIV/0!	-	#DIV/0!	-	#DIV/0!	-	#DIV/0!	-	#DIV/0!	-	#DIV/0!	-	#DIV/0!
GROSS PATIENT CARE REVENUE	2,719,070,165	3,266,603,970	20.1%	3,053,837,444	-6.5%	3,485,682,315	14.1%	3,802,879,405	9.1%	3,935,980,184	3.5%	4,073,739,491	3.5%	4,216,320,373	3.5%	4,363,891,586	3.5%
DISPROPORTIONATE SHARE PAYMENTS	11,260,268	11,214,283	-0.4%	11,223,480	0.1%	11,214,283	-0.1%	12,234,783	9.1%	12,663,000	3.5%	13,106,205	3.5%	13,564,922	3.5%	14,039,695	3.5%
BAD DEBT FREE CARE	(46,435,209)	(59,260,462)	27.6%	(44,297,609)	-25.2%	(62,334,502)	40.7%	(68,006,941)	9.1%	(70,387,184)	3.5%	(72,850,736)	3.5%	(75,400,511)	3.5%	(78,039,529)	3.5%
DEDUCTIONS FROM REVENUE	(1,650,456,761)	(2,031,322,732)	23.1%	(1,896,942,492)	-6.6%	(2,118,848,558)	11.7%	(2,311,663,777)	9.1%	(2,392,572,009)	3.5%	(2,476,312,029)	3.5%	(2,562,982,950)	3.5%	(2,652,687,353)	3.5%
NET PATIENT CARE REVENUE	1,033,438,463	1,187,235,059	14.9%	1,123,820,823	-5.3%	1,315,713,538	17.1%	1,435,443,470	9.1%	1,485,683,991	3.5%	1,537,682,931	3.5%	1,591,501,834	3.5%	1,647,204,398	3.5%
FIXED PROSPECTIVE PAYMENTS AND RESERVES	166,289,772	228,421,374	37.4%	171,967,015	-24.7%	184,880,390	7.5%	201,704,505	9.1%	208,764,163	3.5%	216,070,909	3.5%	223,633,390	3.5%	231,460,559	3.5%
NET PATIENT CARE REV & FIXED PAYMENTS & RESERVE	1,199,728,235	1,415,656,433	18.0%	1,295,787,839	-8.5%	1,500,593,928	15.8%	1,637,147,975	9.1%	1,694,448,154	3.5%	1,753,753,840	3.5%	1,815,135,224	3.5%	1,878,664,957	3.5%
OTHER OPERATING REVENUE	258,366,310	186,051,743	-28.0%	281,949,621	51.5%	213,583,061	-24.2%	233,019,119	9.1%	241,174,788	3.5%	249,615,906	3.5%	258,352,462	3.5%	267,394,799	3.5%
TOTAL OPERATING REVENUE	1,458,094,545	1,601,708,176	9.8%	1,577,737,460	-1.5%	1,714,176,988	8.6%	1,870,167,094	9.1%	1,935,622,943	3.5%	2,003,369,746	3.5%	2,073,487,687	3.5%	2,146,059,756	3.5%
OPERATING EXPENSE																	
SALARIES NON MD	490,345,065	889,402,666	81.4%	523,224,792	-41.2%	551,773,862	5.5%	601,985,283	9.1%	623,054,768	3.5%	644,861,685	3.5%	667,431,844	3.5%	690,791,959	3.5%
FRINGE BENEFITS NON MD	120,434,942	-	-100.0%	129,907,527	#DIV/0!	151,565,883	16.7%	165,358,378	9.1%	171,145,921	3.5%	177,136,029	3.5%	183,335,790	3.5%	189,752,542	3.5%
PHYSICIAN FEES & SALARIES	194,141,108	-	-100.0%	190,968,928	#DIV/0!	205,922,158	7.8%	224,661,074	9.1%	232,524,212	3.5%	240,662,559	3.5%	249,085,749	3.5%	257,803,750	3.5%
FRINGE BENEFITS MD	29,930,947	-	-100.0%	40,860,089	#DIV/0!	40,408,673	-1.1%	44,085,862	9.1%	45,628,867	3.5%	47,225,877	3.5%	48,878,783	3.5%	50,589,540	3.5%
HEALTH CARE PROVIDER TAX	68,693,127	80,937,888	17.8%	76,329,409	-5.7%	85,942,735	12.6%	93,763,524	9.1%	97,045,248	3.5%	100,441,831	3.5%	103,957,295	3.5%	107,595,801	3.5%
DEPRECIATION AMORTIZATION	65,902,262	64,112,613	-2.7%	62,586,568	-2.4%	70,212,839	12.2%	76,602,208	9.1%	79,283,285	3.5%	82,058,200	3.5%	84,930,237	3.5%	87,902,795	3.5%
INTEREST - LONG/SHORT TERM	17,501,651	17,109,699	-2.2%	16,343,755	-4.5%	16,569,123	1.4%	18,076,913	9.1%	18,709,605	3.5%	19,364,441	3.5%	20,042,196	3.5%	20,743,673	3.5%
OTHER OPERATING EXPENSE	475,152,716	510,102,604	7.4%	484,645,233	-5.0%	540,356,407	11.5%	589,528,840	9.1%	610,162,349	3.5%	631,518,031	3.5%	653,621,162	3.5%	676,497,903	3.5%
TOTAL OPERATING EXPENSE	1,462,101,819	1,561,665,470	6.8%	1,524,866,301	-2.4%	1,662,751,679	9.0%	1,814,062,081	9.1%	1,877,554,254	3.5%	1,943,268,653	3.5%	2,011,283,056	3.5%	2,081,677,963	3.5%
NET OPERATING INCOME (LOSS)	(4,007,273)	40,042,705	-1099.3%	52,871,159	32.0%	51,425,310	-2.7%	56,105,013	9.1%	58,068,688	3.5%	60,101,092	3.5%	62,204,631	3.5%	64,381,793	3.5%
NON-OPERATING REVENUE	(13,736,029)	13,823,608	-200.6%	74,201,402	436.8%	20,981,262	-71.7%	22,890,557	9.1%	23,691,726	3.5%	24,520,937	3.5%	25,379,169	3.5%	26,267,440	3.5%
EXCESS (DEFICIT) OF REVENUE OVER EXPENSE	(17,743,303)	53,866,313	-403.6%	127,072,561	135.9%	72,406,572	-43.0%	78,995,570	9.1%	81,760,415	3.5%	84,622,029	3.5%	87,583,800	3.5%	90,649,233	3.5%

Operating Margin %	-0.3%	2.5%	3.4%	3.0%	3.0%	3.0%	3.0%	3.0%	3.0%
Bad Debt & Free Care%	1.7%	1.8%	1.5%	1.8%	1.8%	1.8%	1.8%	1.8%	1.8%
Compensation Ratio	57.1%	57.0%	58.0%	57.1%	57.1%	57.1%	57.1%	57.1%	57.1%
Capital Cost % of Total Expenses	5.7%	5.2%	5.2%	5.2%	5.2%	5.2%	5.2%	5.2%	5.2%

CT Replacement

INCOME STATEMENT
Table 3B
PROJECT ONLY

	2020	2021		2021		2022		Proposed Yr 2		Proposed Yr 2		Proposed Yr 2		Proposed Yr 2		Proposed Yr 3	
	Actual	Budget	% change	Projection	% change	Budget	% change	2023	% change	2024	% change	2025	% change	2026	% change	2027	% change
REVENUES																	
INPATIENT CARE REVENUE			#DIV/0!		#DIV/0!		#DIV/0!		#DIV/0!		#DIV/0!		#DIV/0!		#DIV/0!		#DIV/0!
OUTPATIENT CARE REVENUE			#DIV/0!		#DIV/0!		#DIV/0!		#DIV/0!		#DIV/0!		#DIV/0!		#DIV/0!		#DIV/0!
OUTPATIENT CARE REVENUE - PHYSICIAN			#DIV/0!		#DIV/0!		#DIV/0!		#DIV/0!		#DIV/0!		#DIV/0!		#DIV/0!		#DIV/0!
CHRONIC/SNF PT CARE REVENUE			#DIV/0!		#DIV/0!		#DIV/0!		#DIV/0!		#DIV/0!		#DIV/0!		#DIV/0!		#DIV/0!
SWING BEDS PT CARE REVENUE			#DIV/0!		#DIV/0!		#DIV/0!		#DIV/0!		#DIV/0!		#DIV/0!		#DIV/0!		#DIV/0!
																	#DIV/0!
GROSS PATIENT CARE REVENUE	-	-	#DIV/0!	-	#DIV/0!	-	#DIV/0!	-	#DIV/0!	-	#DIV/0!	-	#DIV/0!	-	#DIV/0!	-	#DIV/0!
																	#DIV/0!
DISPROPORTIONATE SHARE PAYMENTS			#DIV/0!		#DIV/0!		#DIV/0!		#DIV/0!		#DIV/0!		#DIV/0!		#DIV/0!		#DIV/0!
BAD DEBT FREE CARE			#DIV/0!		#DIV/0!		#DIV/0!		#DIV/0!		#DIV/0!		#DIV/0!		#DIV/0!		#DIV/0!
DEDUCTIONS FROM REVENUE			#DIV/0!		#DIV/0!		#DIV/0!		#DIV/0!		#DIV/0!		#DIV/0!		#DIV/0!		#DIV/0!
			#DIV/0!		#DIV/0!		#DIV/0!		#DIV/0!		#DIV/0!		#DIV/0!		#DIV/0!		#DIV/0!
NET PATIENT CARE REVENUE	-	-	#DIV/0!	-	#DIV/0!	-	#DIV/0!	-	#DIV/0!	-	#DIV/0!	-	#DIV/0!	-	#DIV/0!	-	#DIV/0!
FIXED PROSPECTIVE PAYMENTS AND RESERVES	#VALUE!	#VALUE!	#VALUE!		#VALUE!		#DIV/0!		#DIV/0!		#DIV/0!		#DIV/0!		#DIV/0!		#DIV/0!
NET PATIENT CARE REV & FIXED PAYMENTS & RESERVES			#DIV/0!		#DIV/0!		#DIV/0!		#DIV/0!		#DIV/0!		#DIV/0!		#DIV/0!		#DIV/0!
																	#DIV/0!
Incremental Volume - Net Patient Revenue								0	#DIV/0!	0	#DIV/0!	0	#DIV/0!	0	#DIV/0!	0	#DIV/0!
Reimb. Adjustment for Medicare Population 11								0	#DIV/0!	0	#DIV/0!	0	#DIV/0!	0	#DIV/0!	0	#DIV/0!
Adjusted: NET PATIENT CARE REV & FIXED PAYMENTS & RESERVES								0	#DIV/0!	0	#DIV/0!	0	#DIV/0!	0	#DIV/0!	0	#DIV/0!
																	#DIV/0!
OTHER OPERATING REVENUE			#DIV/0!		#DIV/0!		#DIV/0!		#DIV/0!		#DIV/0!		#DIV/0!		#DIV/0!		#DIV/0!
Additional Volume: OP Pharmacy Revenue after Expenses								0		0	#DIV/0!	0		0		0	#DIV/0!
																	#DIV/0!
TOTAL OPERATING REVENUE	-	-	#DIV/0!	-	#DIV/0!	-	#DIV/0!	-	#DIV/0!	-	#DIV/0!	-	#DIV/0!	-	#DIV/0!	-	#DIV/0!
																	#DIV/0!
OPERATING EXPENSE																	#DIV/0!
SALARIES NON MD			#DIV/0!		#DIV/0!		#DIV/0!	-	#DIV/0!	-	#DIV/0!	-	#DIV/0!	-	#DIV/0!	-	#DIV/0!
FRINGE BENEFITS NON MD			#DIV/0!		#DIV/0!		#DIV/0!	-	#DIV/0!	-	#DIV/0!	-	#DIV/0!	-	#DIV/0!	-	#DIV/0!
PHYSICIAN FEES & SALARIES			#DIV/0!		#DIV/0!		#DIV/0!	-	#DIV/0!	-	#DIV/0!	-	#DIV/0!	-	#DIV/0!	-	#DIV/0!
FRINGE BENEFITS MD			#DIV/0!		#DIV/0!		#DIV/0!	-	#DIV/0!	-	#DIV/0!	-	#DIV/0!	-	#DIV/0!	-	#DIV/0!
HEALTH CARE PROVIDER TAX			#DIV/0!		#DIV/0!		#DIV/0!	-	#DIV/0!	-	#DIV/0!	-	#DIV/0!	-	#DIV/0!	-	#DIV/0!
DEPRECIATION AMORTIZATION			#DIV/0!		#DIV/0!		#DIV/0!	452,631	#DIV/0!	452,631	0.0%	452,631	0.0%	452,631	0.0%	452,631	0.0%
INTEREST - LONG/SHORT TERM			#DIV/0!		#DIV/0!		#DIV/0!		#DIV/0!		#DIV/0!		#DIV/0!		#DIV/0!		#DIV/0!
OTHER OPERATING EXPENSE			#DIV/0!		#DIV/0!		#DIV/0!	69,000	#DIV/0!	161,696	134.3%	161,696	0.0%	161,696	0.0%	161,696	0.0%
Facility Operating Expense			#DIV/0!		#DIV/0!		#DIV/0!	-	#DIV/0!	-	#DIV/0!	-	#DIV/0!	-	#DIV/0!	-	#DIV/0!
Med/Surg/Pharmaceutical Supplies			#DIV/0!		#DIV/0!		#DIV/0!	-	#DIV/0!	-	#DIV/0!	-	#DIV/0!	-	#DIV/0!	-	#DIV/0!
Cost offsets (Current Service Contract)			#DIV/0!		#DIV/0!		#DIV/0!	(90,210)	#DIV/0!	(90,210)	0.0%	(90,210)	0.0%	(90,210)	0.0%	(90,210)	0.0%
																	#DIV/0!
TOTAL OPERATING EXPENSE	-	-	#DIV/0!	-	#DIV/0!	-	#DIV/0!	431,421	#DIV/0!	524,117	21.5%	524,117	0.0%	524,117	0.0%	524,117	0.0%
																	#DIV/0!
NET OPERATING INCOME (LOSS)	-	-	#DIV/0!	-	#DIV/0!	-	#DIV/0!	(431,421)	#DIV/0!	(524,117)	21.5%	(524,117)	0.0%	(524,117)	0.0%	(524,117)	0.0%
																	#DIV/0!
NON-OPERATING REVENUE			#DIV/0!		#DIV/0!		#DIV/0!		#DIV/0!		#DIV/0!		#DIV/0!		#DIV/0!		#DIV/0!
EXCESS (DEFICIT) OF REVENUE OVER EXPENSE	-	-	#DIV/0!	-	#DIV/0!	-	#DIV/0!	(431,421)	#DIV/0!	(524,117)	21.5%	(524,117)	0.0%	(524,117)	0.0%	(524,117)	0.0%

CT Replacement

Note: This table requires no "fill-in" as it is populated automatically

INCOME STATEMENT

Table 3C

WITH PROJECT

	2020	2021		2021		2022		Proposed Yr 2		Proposed Yr 2		Proposed Yr 2		Proposed Yr 2		Proposed Yr 3	
	Actual	Budget	% change	Projection	% change	Budget	% change	2023	% change	2024	% change	2025	% change	2026	% change	2027	% change
REVENUES																	
INPATIENT CARE REVENUE	961,991,066	-	-100.0%	987,667,855	#DIV/0!	1,139,480,429	15.4%	1,243,173,148	9.1%	1,286,684,208	3.5%	1,331,718,155	3.5%	1,378,328,291	3.5%	1,426,569,781	3.5%
OUTPATIENT CARE REVENUE	1,199,832,825	3,266,603,970	172.3%	1,473,369,737	-54.9%	1,608,905,587	9.2%	1,755,315,995	9.1%	1,816,752,055	3.5%	1,880,338,377	3.5%	1,946,150,220	3.5%	2,014,265,478	3.5%
OUTPATIENT CARE REVENUE - PHYSICIAN	534,405,279	-	-100.0%	573,834,762	#DIV/0!	701,663,177	22.3%	765,514,526	9.1%	792,307,534	3.5%	820,038,298	3.5%	848,739,638	3.5%	878,445,525	3.5%
CHRONIC/SNF PT CARE REVENUE	22,840,995	-	-100.0%	18,965,090	#DIV/0!	35,633,122	87.9%	38,875,736	9.1%	40,236,387	3.5%	41,644,661	3.5%	43,102,224	3.5%	44,610,801	3.5%
SWING BEDS PT CARE REVENUE	-	-	#DIV/0!	-	#DIV/0!	-	#DIV/0!	-	#DIV/0!	-	#DIV/0!	-	#DIV/0!	-	#DIV/0!	-	#DIV/0!
GROSS PATIENT CARE REVENUE	2,719,070,165	3,266,603,970	20.1%	3,053,837,444	-6.5%	3,485,682,315	14.1%	3,802,879,405	9.1%	3,935,980,184	3.5%	4,073,739,491	3.5%	4,216,320,373	3.5%	4,363,891,586	3.5%
DISPROPORTIONATE SHARE PAYMENTS	11,260,268	11,214,283	-0.4%	11,223,480	0.1%	11,214,283	-0.1%	12,234,783	9.1%	12,663,000	3.5%	13,106,205	3.5%	13,564,922	3.5%	14,039,695	3.5%
BAD DEBT FREE CARE	(46,435,209)	(59,260,462)	27.6%	(44,297,609)	-25.2%	(62,334,502)	40.7%	(68,006,941)	9.1%	(70,387,184)	3.5%	(72,850,736)	3.5%	(75,400,511)	3.5%	(78,039,529)	3.5%
DEDUCTIONS FROM REVENUE	(1,650,456,761)	(2,031,322,732)	23.1%	(1,896,942,492)	-6.6%	(2,118,848,558)	11.7%	(2,311,663,777)	9.1%	(2,392,572,009)	3.5%	(2,476,312,029)	3.5%	(2,562,982,950)	3.5%	(2,652,687,353)	3.5%
	-	-	#DIV/0!	-	#DIV/0!	-	#DIV/0!	-	#DIV/0!	-	#DIV/0!	-	#DIV/0!	-	#DIV/0!	-	#DIV/0!
NET PATIENT CARE REVENUE	1,033,438,463	1,187,235,059	14.9%	1,123,820,823	-5.3%	1,315,713,538	17.1%	1,435,443,470	9.1%	1,485,683,991	3.5%	1,537,682,931	3.5%	1,591,501,834	3.5%	1,647,204,398	3.5%
FIXED PROSPECTIVE PAYMENTS AND RESERVES	#VALUE!	#VALUE!	#VALUE!	171,967,015	#VALUE!	184,880,390	7.5%	201,704,505	9.1%	208,764,163	3.5%	216,070,909	3.5%	223,633,390	3.5%	231,460,559	3.5%
NET PATIENT CARE REV & FIXED PAYMENTS & RESERVE	1,199,728,235	1,415,656,433	18.0%	1,295,787,839	-8.5%	1,500,593,928	15.8%	1,637,147,975	9.1%	1,694,448,154	3.5%	1,753,753,840	3.5%	1,815,135,224	3.5%	1,878,664,957	3.5%
Incremental Volume - Net Patient Revenue								0	#DIV/0!	0	#DIV/0!	0	#DIV/0!	0	#DIV/0!	0	#DIV/0!
Reimb. Adjustment for Medicare Population 11								0	#DIV/0!	0	#DIV/0!	0	#DIV/0!	0	#DIV/0!	0	#DIV/0!
Adjusted: NET PATIENT CARE REV & FIXED PAYMENTS & RESERVES								1,637,147,975	#DIV/0!	1,694,448,154	3.5%	1,753,753,840	3.5%	1,815,135,224	3.5%	1,878,664,957	3.5%
OTHER OPERATING REVENUE	258,366,310	186,051,743	-28.0%	281,949,621	51.5%	213,583,061	-24.2%	233,019,119	9.1%	241,174,788	3.5%	249,615,906	3.5%	258,352,462	3.5%	267,394,799	3.5%
Additional Volume: OP Pharmacy Revenue after Expenses								0		0		0		0		0	
TOTAL OPERATING REVENUE	1,458,094,545	1,601,708,176	9.8%	1,577,737,460	-1.5%	1,714,176,988	8.6%	1,870,167,094	9.1%	1,935,622,943	3.5%	2,003,369,746	3.5%	2,073,487,687	3.5%	2,146,059,756	3.5%
OPERATING EXPENSE																	
SALARIES NON MD	490,345,065	889,402,666	81.4%	523,224,792	-41.2%	551,773,862	5.5%	601,985,283	9.1%	623,054,768	3.5%	644,861,685	3.5%	667,431,844	3.5%	690,791,959	3.5%
FRINGE BENEFITS NON MD	120,434,942	-	-100.0%	129,907,527	#DIV/0!	151,565,883	16.7%	165,358,378	9.1%	171,145,921	3.5%	177,136,029	3.5%	183,335,790	3.5%	189,752,542	3.5%
FRINGE BENEFITS MD	194,141,108	-	-100.0%	190,968,928	#DIV/0!	205,922,158	7.8%	224,661,074	9.1%	232,524,212	3.5%	240,662,559	3.5%	249,085,749	3.5%	257,803,750	3.5%
PHYSICIAN FEES & SALARIES	29,930,947	-	-100.0%	40,860,089	#DIV/0!	40,408,673	-1.1%	44,085,862	9.1%	45,628,867	3.5%	47,225,877	3.5%	48,878,783	3.5%	50,589,540	3.5%
HEALTH CARE PROVIDER TAX	68,693,127	80,937,888	17.8%	76,329,409	-5.7%	85,942,735	12.6%	93,763,524	9.1%	97,045,248	3.5%	100,441,831	3.5%	103,957,295	3.5%	107,595,801	3.5%
DEPRECIATION AMORTIZATION	65,902,262	64,112,613	-2.7%	62,586,568	-2.4%	70,212,839	12.2%	77,054,838	9.7%	79,735,915	3.5%	82,510,830	3.5%	85,382,867	3.5%	88,355,426	3.5%
INTEREST - LONG/SHORT TERM	17,501,651	17,109,699	-2.2%	16,343,755	-4.5%	16,569,123	1.4%	18,076,913	9.1%	18,709,605	3.5%	19,364,441	3.5%	20,042,196	3.5%	20,743,673	3.5%
OTHER OPERATING EXPENSE	475,152,716	510,102,604	7.4%	484,645,233	-5.0%	540,356,407	11.5%	589,597,840	9.1%	610,324,045	3.5%	631,679,727	3.5%	653,782,858	3.5%	676,659,599	3.5%
Facility Operating Expense			#DIV/0!		#DIV/0!		#DIV/0!	0	#DIV/0!	0	#DIV/0!	0	#DIV/0!	0	#DIV/0!	0	#DIV/0!
Med/Surg/Pharmaceutical Supplies			#DIV/0!		#DIV/0!		#DIV/0!	0	#DIV/0!	0	#DIV/0!	0	#DIV/0!	0	#DIV/0!	0	#DIV/0!
Cost offsets (Current Service Contract)			#DIV/0!		#DIV/0!		#DIV/0!	-90,210	#DIV/0!	-90,210	0.0%	-90,210	0.0%	-90,210	0.0%	-90,210	0.0%
TOTAL OPERATING EXPENSE	1,462,101,819	1,561,665,470	6.8%	1,524,866,301	-2.4%	1,662,751,679	9.0%	1,814,493,502	9.1%	1,878,078,371	3.5%	1,943,792,770	3.5%	2,011,807,173	3.5%	2,082,202,080	3.5%
NET OPERATING INCOME (LOSS)	(4,007,273)	40,042,705	-1099.3%	52,871,159	32.0%	51,425,310	-2.7%	55,673,592	8.3%	57,544,572	3.4%	59,576,976	3.5%	61,680,514	3.5%	63,857,676	3.5%
NON-OPERATING REVENUE	(13,736,029)	13,823,608	-200.6%	74,201,402	436.8%	20,981,262	-71.7%	22,890,557	9.1%	23,691,726	3.5%	24,520,937	3.5%	25,379,169	3.5%	26,267,440	3.5%
EXCESS (DEFICIT) OF REVENUE OVER EXPENSE	(17,743,303)	53,866,313	-403.6%	127,072,561	135.9%	72,406,572	-43.0%	78,564,149	8.5%	81,236,298	3.4%	84,097,912	3.5%	87,059,683	3.5%	90,125,116	3.5%

Operating Margin %	-0.3%	2.5%	3.4%	3.0%	3.0%	3.0%	3.0%	3.0%	3.0%
Bad Debt & Free Care%	1.7%	1.8%	1.5%	1.8%	1.8%	1.8%	1.8%	1.8%	1.8%
Compensation Ratio	57.1%	57.0%	58.0%	57.1%	57.1%	57.1%	57.1%	57.1%	57.1%
Capital Cost % of Total Expenses	5.7%	5.2%	5.2%	5.2%	5.2%	5.2%	5.2%	5.2%	5.2%

THE UNIVERSITY OF VERMONT MEDICAL CENTER

CT Replacement

Balance Sheet

WITHOUT PROJECT

	2020 Actual	2021 Budget	% change	2021 Projection	% change	2022 Budget	% change	2023 Proposed Year 1	% change	2024 Proposed Year 2	% change	2025 Proposed Year 3	% change	2026 Proposed Year 4	% change	2027 Proposed Year 5	% change
ASSETS																	
CURRENT ASSETS																	
CASH & INVESTMENTS	194,792,429	244,783,431	25.7%	224,688,488	-8.2%	172,991,275	-23.0%	177,670,979	2.7%	184,314,357	3.7%	192,990,140	4.7%	203,769,461	5.6%	216,725,944	6.4%
PATIENT ACCOUNTS RECEIVABLE, GROSS	204,170,809	160,188,263	-21.5%	214,224,870	33.7%	214,224,870	0.0%	214,224,870	0.0%	214,224,870	0.0%	214,224,870	0.0%	214,224,870	0.0%	214,224,870	0.0%
LESS: ALLOWANCE FOR UNCOLLECTIBLE ACCTS	(42,065,964)	-	-100.0%	(37,057,939)	#DIV/0!	(37,057,939)	0.0%	(37,057,939)	0.0%	(37,057,939)	0.0%	(37,057,939)	0.0%	(37,057,939)	0.0%	(37,057,939)	0.0%
DUE FROM THIRD PARTIES	32,009,063	-	-100.0%	37,425,396	#DIV/0!	37,425,396	0.0%	37,425,396	0.0%	37,425,396	0.0%	37,425,396	0.0%	37,425,396	0.0%	37,425,396	0.0%
ACO RISK RESERVE/SETTLEMENT RECEIVABLE	6,442,700	-	-100.0%	3,798,677	#DIV/0!	5,000,000	31.6%	5,000,000	0.0%	5,000,000	0.0%	5,000,000	0.0%	5,000,000	0.0%	5,000,000	0.0%
OTHER CURRENT ASSETS	109,419,193	116,307,813	6.3%	106,016,163	-8.8%	106,016,163	0.0%	106,016,163	0.0%	106,016,163	0.0%	106,016,163	0.0%	106,016,163	0.0%	106,016,163	0.0%
TOTAL CURRENT ASSETS	504,768,230	521,279,507	3.3%	549,095,655	5.3%	498,599,766	-9.2%	503,279,469	0.9%	509,922,847	1.3%	518,598,630	1.7%	529,377,951	2.1%	542,334,434	2.4%
BOARD DESIGNATED ASSETS					#DIV/0!		#DIV/0!	-	#DIV/0!	-	#DIV/0!	-	#DIV/0!	-	#DIV/0!	-	#DIV/0!
FUNDED DEPRECIATION	544,279,307	516,577,841	-5.1%	612,315,947	18.5%	633,297,209	3.4%	633,297,209	0.0%	633,297,209	0.0%	633,297,209	0.0%	633,297,209	0.0%	633,297,209	0.0%
ESCROWED BOND FUNDS	72,243,481	-	-100.0%	-	#DIV/0!	-	#DIV/0!	-	#DIV/0!	-	#DIV/0!	-	#DIV/0!	-	#DIV/0!	-	#DIV/0!
OTHER	-	-	#DIV/0!	87,880,000	#DIV/0!	87,880,000	0.0%	87,880,000	0.0%	87,880,000	0.0%	87,880,000	0.0%	87,880,000	0.0%	87,880,000	0.0%
TOTAL BOARD DESIGNATED ASSETS	616,522,788	516,577,841	-16.2%	700,195,946	35.5%	721,177,208	3.0%	721,177,208	0.0%	721,177,208	0.0%	721,177,208	0.0%	721,177,208	0.0%	721,177,208	0.0%
PROPERTY, PLANT, AND EQUIPMENT																	
LAND, BUILDINGS & IMPROVEMENTS	913,207,548	646,684,466	-29.2%	923,177,459	42.8%	957,180,476	3.7%	957,180,476	0.0%	957,180,476	0.0%	957,180,476	0.0%	957,180,476	0.0%	957,180,476	0.0%
CONSTRUCTION IN PROGRESS	25,321,642	-	-100.0%	36,289,707	#DIV/0!	36,289,707	0.0%	36,289,707	0.0%	36,289,707	0.0%	36,289,707	0.0%	36,289,707	0.0%	36,289,707	0.0%
MAJOR MOVABLE EQUIPMENT	485,492,437	-	-100.0%	491,436,173	#DIV/0!	525,773,537	7.0%	525,773,537	0.0%	525,773,537	0.0%	525,773,537	0.0%	525,773,537	0.0%	525,773,537	0.0%
FIXED EQUIPMENT	-	-	#DIV/0!	-	#DIV/0!	-	#DIV/0!	-	#DIV/0!	-	#DIV/0!	-	#DIV/0!	-	#DIV/0!	-	#DIV/0!
TOTAL PROPERTY, PLANT AND EQUIPMENT	1,424,021,627	646,684,466	-54.6%	1,450,903,339	124.4%	1,519,243,720	4.7%	1,519,243,720	0.0%	1,519,243,720	0.0%	1,519,243,720	0.0%	1,519,243,720	0.0%	1,519,243,720	0.0%
LESS: ACCUMULATED DEPRECIATION																	
LAND, BUILDINGS & IMPROVEMENTS	(422,526,056)	-	-100.0%	(455,118,426)	#DIV/0!	(492,874,419)	8.3%	(492,874,419)	0.0%	(492,874,419)	0.0%	(492,874,419)	0.0%	(492,874,419)	0.0%	(492,874,419)	0.0%
EQUIPMENT - FIXED	-	-	#DIV/0!	-	#DIV/0!	-	#DIV/0!	-	#DIV/0!	-	#DIV/0!	-	#DIV/0!	-	#DIV/0!	-	#DIV/0!
EQUIPMENT - MAJOR MOVEABLE	(361,372,990)	-	-100.0%	(391,241,433)	#DIV/0!	(423,698,279)	8.3%	(423,698,279)	0.0%	(423,698,279)	0.0%	(423,698,279)	0.0%	(423,698,279)	0.0%	(423,698,279)	0.0%
TOTAL ACCUMULATED DEPRECIATION	(783,899,046)	-	-100.0%	(846,359,859)	#DIV/0!	(916,572,698)	8.3%	(916,572,698)	0.0%	(916,572,698)	0.0%	(916,572,698)	0.0%	(916,572,698)	0.0%	(916,572,698)	0.0%
TOTAL PROPERTY, PLANT AND EQUIPMENT, NET	640,122,581	646,684,466	1.0%	604,543,480	-6.5%	602,671,022	-0.3%	602,671,022	0.0%	602,671,022	0.0%	602,671,022	0.0%	602,671,022	0.0%	602,671,022	0.0%
OTHER LONG-TERM ASSETS	65,559,813	142,233,196	117.0%	65,947,792	-53.6%	65,947,792	0.0%	65,947,792	0.0%	65,947,792	0.0%	65,947,792	0.0%	65,947,792	0.0%	65,947,792	0.0%
TOTAL ASSETS	**1,826,973,412**	**1,826,775,010**	0.0%	**1,919,782,873**	5.1%	**1,888,395,787**	-1.6%	**1,893,075,491**	0.2%	**1,899,718,869**	0.4%	**1,908,394,652**	0.5%	**1,919,173,973**	0.6%	**1,932,130,456**	0.7%
LIABILITIES AND FUND BALANCE																	
CURRENT LIABILITIES																	
ACCOUNTS PAYABLE	27,779,653	35,717,005	28.6%	42,892,632	20.1%	42,892,632	0.0%	42,892,632	0.0%	42,892,632	0.0%	42,892,632	0.0%	42,892,632	0.0%	42,892,632	0.0%
CURRENT LIABILITIES COVID-19	76,060,696	21,500,000	-71.7%	60,190,837	180.0%	-	-100.0%	-	#DIV/0!	-	#DIV/0!	-	#DIV/0!	-	#DIV/0!	-	#DIV/0!
SALARIES, WAGES AND PAYROLL TAXES PAYABLE	97,282,786	88,103,110	-9.4%	83,759,092	-4.9%	83,759,092	0.0%	83,759,092	0.0%	83,759,092	0.0%	83,759,092	0.0%	83,759,092	0.0%	83,759,092	0.0%
ESTIMATED THIRD-PARTY SETTLEMENTS	19,230,660	-	-100.0%	23,462,235	#DIV/0!	3,165,681	-86.5%	3,165,681	0.0%	3,165,681	0.0%	3,165,681	0.0%	3,165,681	0.0%	3,165,681	0.0%
OTHER CURRENT LIABILITIES	53,997,052	67,936,249	25.8%	54,494,848	-19.8%	54,494,848	0.0%	54,494,848	0.0%	54,494,848	0.0%	54,494,848	0.0%	54,494,848	0.0%	54,494,848	0.0%
CURRENT PORTION OF LONG-TERM DEBT	19,783,625	-	-100.0%	19,833,768	#DIV/0!	22,322,022	12.5%	22,322,022	0.0%	22,322,022	0.0%	22,322,022	0.0%	22,322,022	0.0%	22,322,022	0.0%
TOTAL CURRENT LIABILITIES	294,134,472	213,256,364	-27.5%	284,633,412	33.5%	206,634,275	-27.4%	206,634,275	0.0%	206,634,275	0.0%	206,634,275	0.0%	206,634,275	0.0%	206,634,275	0.0%
LONG-TERM DEBT																	
LONG TERM LIABILITIES COVID-19	-	-	#DIV/0!	-	#DIV/0!	-	#DIV/0!	-	#DIV/0!	-	#DIV/0!	-	#DIV/0!	-	#DIV/0!	-	#DIV/0!
BONDS & MORTGAGES PAYABLE	438,669,100	418,647,828	-4.6%	418,831,254	0.0%	394,909,193	-5.7%	394,909,193	0.0%	394,909,193	0.0%	394,909,193	0.0%	394,909,193	0.0%	394,909,193	0.0%
CAPITAL LEASE OBLIGATIONS	-	-	#DIV/0!	1,162,611	#DIV/0!	1,162,611	0.0%	1,162,611	0.0%	1,162,611	0.0%	1,162,611	0.0%	1,162,611	0.0%	1,162,611	0.0%
OTHER LONG-TERM DEBT	-	-	#DIV/0!	-	#DIV/0!	-	#DIV/0!	-	#DIV/0!	-	#DIV/0!	-	#DIV/0!	-	#DIV/0!	-	#DIV/0!
TOTAL LONG-TERM DEBT	438,669,100	418,647,828	-4.6%	419,993,865	0.3%	396,071,804	-5.7%	396,071,804	0.0%	396,071,804	0.0%	396,071,804	0.0%	396,071,804	0.0%	396,071,804	0.0%
OTHER NONCURRENT LIABILITIES	71,693,432	69,469,463	-3.1%	67,303,398	-3.1%	67,303,398	0.0%	67,303,398	0.0%	67,303,398	0.0%	67,303,398	0.0%	67,303,398	0.0%	67,303,398	0.0%
TOTAL LIABILITIES	**804,497,004**	**701,373,655**	-12.8%	**771,930,676**	10.1%	**670,009,478**	-13.2%	**670,009,478**	0.0%	**670,009,478**	0.0%	**670,009,478**	0.0%	**670,009,478**	0.0%	**670,009,478**	0.0%
FUND BALANCE	1,022,476,409	1,125,401,355	10.1%	1,147,852,197	2.0%	1,218,386,310	6.1%	1,223,066,013	0.4%	1,229,709,391	0.5%	1,238,385,174	0.7%	1,249,164,495	0.9%	1,262,120,978	1.0%
TOTAL LIABILITIES AND FUND BALANCE	**1,826,973,413**	**1,826,775,010**	0.0%	**1,919,782,873**	5.1%	**1,888,395,787**	-1.6%	**1,893,075,490**	0.2%	**1,899,718,869**	0.4%	**1,908,394,652**	0.5%	**1,919,173,973**	0.6%	**1,932,130,456**	0.7%

THE UNIVERSITY OF VERMONT MEDICAL CENTER

CT Replacement

Balance Sheet

PROJECT ONLY

	2020 Actual	2021 Budget	% change	2021 Projection	% change	2022 Budget	% change	2023 Proposed Year 1	% change	2024 Proposed Year 2	% change	2025 Proposed Year 3	% change	2026 Proposed Year 4	% change	2027 Proposed Year 5	% change
ASSETS																	
CURRENT ASSETS																	
CASH & INVESTMENTS			#DIV/0!		#DIV/0!		#DIV/0!	(3,380,265)	#DIV/0!	(3,451,751)	2.1%	(3,523,237)	2.1%	(3,594,723)	2.0%	(3,666,209)	2.0%
PATIENT ACCOUNTS RECEIVABLE, GROSS			#DIV/0!		#DIV/0!		#DIV/0!		#DIV/0!		#DIV/0!		#DIV/0!		#DIV/0!		#DIV/0!
LESS: ALLOWANCE FOR UNCOLLECTIBLE ACCTS			#DIV/0!		#DIV/0!		#DIV/0!		#DIV/0!		#DIV/0!		#DIV/0!		#DIV/0!		#DIV/0!
DUE FROM THIRD PARTIES			#DIV/0!		#DIV/0!		#DIV/0!		#DIV/0!		#DIV/0!		#DIV/0!		#DIV/0!		#DIV/0!
ACO RISK RESERVE/SETTLEMENT RECEIVABLE			#DIV/0!		#DIV/0!		#DIV/0!		#DIV/0!		#DIV/0!		#DIV/0!		#DIV/0!		#DIV/0!
OTHER CURRENT ASSETS			#DIV/0!		#DIV/0!		#DIV/0!		#DIV/0!		#DIV/0!		#DIV/0!		#DIV/0!		#DIV/0!
TOTAL CURRENT ASSETS	-	-	#DIV/0!	-	#DIV/0!	-	#DIV/0!	(3,380,265)	#DIV/0!	(3,451,751)	2.1%	(3,523,237)	2.1%	(3,594,723)	2.0%	(3,666,209)	2.0%
BOARD DESIGNATED ASSETS					#DIV/0!		#DIV/0!		#DIV/0!		#DIV/0!		#DIV/0!		#DIV/0!		#DIV/0!
FUNDED DEPRECIATION			#DIV/0!		#DIV/0!		#DIV/0!		#DIV/0!		#DIV/0!		#DIV/0!		#DIV/0!		#DIV/0!
ESCROWED BOND FUNDS			#DIV/0!		#DIV/0!		#DIV/0!		#DIV/0!		#DIV/0!		#DIV/0!		#DIV/0!		#DIV/0!
OTHER			#DIV/0!		#DIV/0!		#DIV/0!		#DIV/0!		#DIV/0!		#DIV/0!		#DIV/0!		#DIV/0!
TOTAL BOARD DESIGNATED ASSETS	-	-	#DIV/0!	-	#DIV/0!	-	#DIV/0!	-	#DIV/0!	-	#DIV/0!	-	#DIV/0!	-	#DIV/0!	-	#DIV/0!
PROPERTY, PLANT, AND EQUIPMENT																	
LAND, BUILDINGS & IMPROVEMENTS			#DIV/0!		#DIV/0!		#DIV/0!	1,591,700	#DIV/0!	1,591,700	0.0%	1,591,700	0.0%	1,591,700	0.0%	1,591,700	0.0%
CONSTRUCTION IN PROGRESS			#DIV/0!		#DIV/0!		#DIV/0!		#DIV/0!		#DIV/0!		#DIV/0!		#DIV/0!		#DIV/0!
MAJOR MOVABLE EQUIPMENT			#DIV/0!		#DIV/0!		#DIV/0!		#DIV/0!		#DIV/0!		#DIV/0!		#DIV/0!		#DIV/0!
FIXED EQUIPMENT			#DIV/0!		#DIV/0!		#DIV/0!	1,865,228	#DIV/0!	1,865,228	0.0%	1,865,228	0.0%	1,865,228	0.0%	1,865,228	0.0%
TOTAL PROPERTY, PLANT AND EQUIPMENT	-	-	#DIV/0!	-	#DIV/0!	-	#DIV/0!	3,456,928	#DIV/0!	3,456,928	0.0%	3,456,928	0.0%	3,456,928	0.0%	3,456,928	0.0%
LESS: ACCUMULATED DEPRECIATION																	
LAND, BUILDINGS & IMPROVEMENTS			#DIV/0!		#DIV/0!		#DIV/0!	-	#DIV/0!	-	#DIV/0!	-	#DIV/0!	-	#DIV/0!	-	#DIV/0!
EQUIPMENT - FIXED			#DIV/0!		#DIV/0!		#DIV/0!	(452,631)	#DIV/0!	(905,261)	100.0%	(1,357,892)	50.0%	(1,810,522)	33.3%	(2,263,153)	25.0%
EQUIPMENT - MAJOR MOVEABLE			#DIV/0!		#DIV/0!		#DIV/0!		#DIV/0!		#DIV/0!		#DIV/0!		#DIV/0!		#DIV/0!
TOTAL ACCUMULATED DEPRECIATION	-	-	#DIV/0!	-	#DIV/0!	-	#DIV/0!	(452,631)	#DIV/0!	(905,261)	100.0%	(1,357,892)	50.0%	(1,810,522)	33.3%	(2,263,153)	25.0%
TOTAL PROPERTY, PLANT AND EQUIPMENT, NET	-	-	#DIV/0!	-	#DIV/0!	-	#DIV/0!	3,004,297	#DIV/0!	2,551,666	-15.1%	2,099,036	-17.7%	1,646,405	-21.6%	1,193,775	-27.5%
OTHER LONG-TERM ASSETS			#DIV/0!		#DIV/0!		#DIV/0!		#DIV/0!		#DIV/0!		#DIV/0!		#DIV/0!		#DIV/0!
TOTAL ASSETS	**-**	**-**	#DIV/0!	**-**	#DIV/0!	**-**	#DIV/0!	**(375,968)**	#DIV/0!	**(900,084)**	139.4%	**(1,424,201)**	58.2%	**(1,948,317)**	36.8%	**(2,472,434)**	26.9%
LIABILITIES AND FUND BALANCE																	
CURRENT LIABILITIES																	
ACCOUNTS PAYABLE			#DIV/0!		#DIV/0!		#DIV/0!		#DIV/0!		#DIV/0!		#DIV/0!		#DIV/0!		#DIV/0!
CURRENT LIABILITIES COVID-19			#DIV/0!		#DIV/0!		#DIV/0!		#DIV/0!		#DIV/0!		#DIV/0!		#DIV/0!		#DIV/0!
SALARIES, WAGES AND PAYROLL TAXES PAYABLE			#DIV/0!		#DIV/0!		#DIV/0!		#DIV/0!		#DIV/0!		#DIV/0!		#DIV/0!		#DIV/0!
ESTIMATED THIRD-PARTY SETTLEMENTS			#DIV/0!		#DIV/0!		#DIV/0!		#DIV/0!		#DIV/0!		#DIV/0!		#DIV/0!		#DIV/0!
OTHER CURRENT LIABILITIES			#DIV/0!		#DIV/0!		#DIV/0!		#DIV/0!		#DIV/0!		#DIV/0!		#DIV/0!		#DIV/0!
CURRENT PORTION OF LONG-TERM DEBT			#DIV/0!		#DIV/0!		#DIV/0!		#DIV/0!		#DIV/0!		#DIV/0!		#DIV/0!		#DIV/0!
TOTAL CURRENT LIABILITIES	-	-	#DIV/0!	-	#DIV/0!	-	#DIV/0!	-	#DIV/0!	-	#DIV/0!	-	#DIV/0!	-	#DIV/0!	-	#DIV/0!
LONG-TERM DEBT																	
LONG TERM LIABILITIES COVID-19			#DIV/0!		#DIV/0!		#DIV/0!		#DIV/0!		#DIV/0!		#DIV/0!		#DIV/0!		#DIV/0!
BONDS & MORTGAGES PAYABLE			#DIV/0!		#DIV/0!		#DIV/0!		#DIV/0!		#DIV/0!		#DIV/0!		#DIV/0!		#DIV/0!
CAPITAL LEASE OBLIGATIONS			#DIV/0!		#DIV/0!		#DIV/0!		#DIV/0!		#DIV/0!		#DIV/0!		#DIV/0!		#DIV/0!
OTHER LONG-TERM DEBT			#DIV/0!		#DIV/0!		#DIV/0!		#DIV/0!		#DIV/0!		#DIV/0!		#DIV/0!		#DIV/0!
TOTAL LONG-TERM DEBT	-	-	#DIV/0!	-	#DIV/0!	-	#DIV/0!	-	#DIV/0!	-	#DIV/0!	-	#DIV/0!	-	#DIV/0!	-	#DIV/0!
OTHER NONCURRENT LIABILITIES			#DIV/0!		#DIV/0!		#DIV/0!		#DIV/0!		#DIV/0!		#DIV/0!		#DIV/0!		#DIV/0!
TOTAL LIABILITIES	**-**	**-**	#DIV/0!	**-**	#DIV/0!	**-**	#DIV/0!	**-**	#DIV/0!	**-**	#DIV/0!	**-**	#DIV/0!	**-**	#DIV/0!	**-**	#DIV/0!
FUND BALANCE			#DIV/0!		#DIV/0!		#DIV/0!	(375,968)	#DIV/0!	(900,084)	139.4%	(1,424,201)	58.2%	(1,948,317)	36.8%	(2,472,434)	26.9%
TOTAL LIABILITIES AND FUND BALANCE	**-**	**-**	#DIV/0!	**-**	#DIV/0!	**-**	#DIV/0!	**(375,968)**	#DIV/0!	**(900,084)**	139.4%	**(1,424,201)**	58.2%	**(1,948,317)**	36.8%	**(2,472,434)**	26.9%

THE UNIVERSITY OF VERMONT MEDICAL CENTER

CT Replacement

Note: This table requires no "fill-in" as it is populated automatically

Balance Sheet

WITH PROJECT

	2020 Actual	2021 Budget	% change	2021 Projection	% change	2022 Budget	% change	2,023 Proposed Year 1	% change	2,024 Proposed Year 2	% change	2,025 Proposed Year 3	% change	2,026 Proposed Year 4	% change	2,027 Proposed Year 5	% change
ASSETS																	
CURRENT ASSETS																	
CASH & INVESTMENTS	194,792,429	244,783,431	25.7%	224,688,488	-8.2%	172,991,275	-23.0%	174,290,714	0.8%	180,862,607	3.8%	189,466,904	4.8%	200,174,739	5.7%	213,059,736	6.4%
PATIENT ACCOUNTS RECEIVABLE, GROSS	204,170,809	160,188,263	-21.5%	214,224,870	33.7%	214,224,870	0.0%	214,224,870	0.0%	214,224,870	0.0%	214,224,870	0.0%	214,224,870	0.0%	214,224,870	0.0%
LESS: ALLOWANCE FOR UNCOLLECTIBLE ACCTS	(42,065,964)	-	-100.0%	(37,057,939)	#DIV/0!	(37,057,939)	0.0%	(37,057,939)	0.0%	(37,057,939)	0.0%	(37,057,939)	0.0%	(37,057,939)	0.0%	(37,057,939)	0.0%
DUE FROM THIRD PARTIES	32,009,063	-	-100.0%	37,425,396	#DIV/0!	37,425,396	0.0%	37,425,396	0.0%	37,425,396	0.0%	37,425,396	0.0%	37,425,396	0.0%	37,425,396	0.0%
ACO RISK RESERVE/SETTLEMENT RECEIVABLE	6,442,700	-	-100.0%	3,798,677	#DIV/0!	5,000,000	31.6%	5,000,000	0.0%	5,000,000	0.0%	5,000,000	0.0%	5,000,000	0.0%	5,000,000	0.0%
OTHER CURRENT ASSETS	109,419,193	116,307,813	6.3%	106,016,163	-8.8%	106,016,163	0.0%	106,016,163	0.0%	106,016,163	0.0%	106,016,163	0.0%	106,016,163	0.0%	106,016,163	0.0%
TOTAL CURRENT ASSETS	504,768,230	521,279,507	3.3%	549,095,655	5.3%	498,599,766	-9.2%	499,899,204	0.3%	506,471,097	1.3%	515,075,394	1.7%	525,783,229	2.1%	538,668,226	2.5%
BOARD DESIGNATED ASSETS					#DIV/0!		#DIV/0!		#DIV/0!		#DIV/0!		#DIV/0!		#DIV/0!		#DIV/0!
FUNDED DEPRECIATION	544,279,307	516,577,841	-5.1%	612,315,947	18.5%	633,297,209	3.4%	633,297,209	0.0%	633,297,209	0.0%	633,297,209	0.0%	633,297,209	0.0%	633,297,209	0.0%
ESCROWED BOND FUNDS	72,243,481	-	-100.0%	-	#DIV/0!	-	#DIV/0!	-	#DIV/0!	-	#DIV/0!	-	#DIV/0!	-	#DIV/0!	-	#DIV/0!
OTHER	-	-	#DIV/0!	87,880,000	#DIV/0!	87,880,000	0.0%	87,880,000	0.0%	87,880,000	0.0%	87,880,000	0.0%	87,880,000	0.0%	87,880,000	0.0%
TOTAL BOARD DESIGNATED ASSETS	616,522,788	516,577,841	-16.2%	700,195,946	35.5%	721,177,208	3.0%	721,177,208	0.0%	721,177,208	0.0%	721,177,208	0.0%	721,177,208	0.0%	721,177,208	0.0%
PROPERTY, PLANT, AND EQUIPMENT																	
LAND, BUILDINGS & IMPROVEMENTS	913,207,548	646,684,466	-29.2%	923,177,459	42.8%	957,180,476	3.7%	958,772,176	0.2%	958,772,176	0.0%	958,772,176	0.0%	958,772,176	0.0%	958,772,176	0.0%
CONSTRUCTION IN PROGRESS	25,321,642	-	-100.0%	36,289,707	#DIV/0!	36,289,707	0.0%	36,289,707	0.0%	36,289,707	0.0%	36,289,707	0.0%	36,289,707	0.0%	36,289,707	0.0%
MAJOR MOVABLE EQUIPMENT	485,492,437	-	-100.0%	491,436,173	#DIV/0!	525,773,537	7.0%	525,773,537	0.0%	525,773,537	0.0%	525,773,537	0.0%	525,773,537	0.0%	525,773,537	0.0%
FIXED EQUIPMENT	-	-	#DIV/0!	-	#DIV/0!	-	#DIV/0!	1,865,228	#DIV/0!	1,865,228	0.0%	1,865,228	0.0%	1,865,228	0.0%	1,865,228	0.0%
TOTAL PROPERTY, PLANT AND EQUIPMENT	1,424,021,627	646,684,466	-54.6%	1,450,903,339	124.4%	1,519,243,720	4.7%	1,522,700,648	0.2%	1,522,700,648	0.0%	1,522,700,648	0.0%	1,522,700,648	0.0%	1,522,700,648	0.0%
LESS: ACCUMULATED DEPRECIATION																	
LAND, BUILDINGS & IMPROVEMENTS	(422,526,056)	-	-100.0%	(455,118,426)	#DIV/0!	(492,874,419)	8.3%	(492,874,419)	0.0%	(492,874,419)	0.0%	(492,874,419)	0.0%	(492,874,419)	0.0%	(492,874,419)	0.0%
EQUIPMENT - FIXED	-	-	#DIV/0!	-	#DIV/0!	-	#DIV/0!	(452,631)	#DIV/0!	(905,261)	100.0%	(1,357,892)	50.0%	(1,810,522)	33.3%	(2,263,153)	25.0%
EQUIPMENT - MAJOR MOVEABLE	(361,372,990)	-	-100.0%	(391,241,433)	#DIV/0!	(423,698,279)	8.3%	(423,698,279)	0.0%	(423,698,279)	0.0%	(423,698,279)	0.0%	(423,698,279)	0.0%	(423,698,279)	0.0%
TOTAL ACCUMULATED DEPRECIATION	(783,899,046)	-	-100.0%	(846,359,859)	#DIV/0!	(916,572,698)	8.3%	(917,025,329)	0.0%	(917,477,959)	0.0%	(917,930,590)	0.0%	(918,383,221)	0.0%	(918,835,851)	0.0%
TOTAL PROPERTY, PLANT AND EQUIPMENT, NET	640,122,581	646,684,466	1.0%	604,543,480	-6.5%	602,671,022	-0.3%	605,675,319	0.5%	605,222,688	-0.1%	604,770,057	-0.1%	604,317,427	-0.1%	603,864,796	-0.1%
OTHER LONG-TERM ASSETS	65,559,813	142,233,196	117.0%	65,947,792	-53.6%	65,947,792	0.0%	65,947,792	0.0%	65,947,792	0.0%	65,947,792	0.0%	65,947,792	0.0%	65,947,792	0.0%
TOTAL ASSETS	**1,826,973,412**	**1,826,775,010**	0.0%	**1,919,782,873**	5.1%	**1,888,395,787**	-1.6%	**1,892,699,523**	0.2%	**1,898,818,785**	0.3%	**1,906,970,451**	0.4%	**1,917,225,656**	0.5%	**1,929,658,022**	0.6%
CURRENT LIABILITIES																	
ACCOUNTS PAYABLE	27,779,653	35,717,005	28.6%	42,892,632	20.1%	42,892,632	0.0%	42,892,632	0.0%	42,892,632	0.0%	42,892,632	0.0%	42,892,632	0.0%	42,892,632	0.0%
CURRENT LIABILITIES COVID-19	76,060,696	21,500,000	-71.7%	60,190,837	180.0%	-	-100.0%	-	#DIV/0!	-	#DIV/0!	-	#DIV/0!	-	#DIV/0!	-	#DIV/0!
SALARIES, WAGES AND PAYROLL TAXES PAYABLE	97,282,786	88,103,110	-9.4%	83,759,092	-4.9%	83,759,092	0.0%	83,759,092	0.0%	83,759,092	0.0%	83,759,092	0.0%	83,759,092	0.0%	83,759,092	0.0%
ESTIMATED THIRD-PARTY SETTLEMENTS	19,230,660	-	-100.0%	23,462,235	#DIV/0!	3,165,681	-86.5%	3,165,681	0.0%	3,165,681	0.0%	3,165,681	0.0%	3,165,681	0.0%	3,165,681	0.0%
OTHER CURRENT LIABILITIES	53,997,052	67,936,249	25.8%	54,494,848	-19.8%	54,494,848	0.0%	54,494,848	0.0%	54,494,848	0.0%	54,494,848	0.0%	54,494,848	0.0%	54,494,848	0.0%
CURRENT PORTION OF LONG-TERM DEBT	19,783,625	-	-100.0%	19,833,768	#DIV/0!	22,322,022	12.5%	22,322,022	0.0%	22,322,022	0.0%	22,322,022	0.0%	22,322,022	0.0%	22,322,022	0.0%
TOTAL CURRENT LIABILITIES	294,134,472	213,256,364	-27.5%	284,633,412	33.5%	206,634,275	-27.4%	206,634,275	0.0%	206,634,275	0.0%	206,634,275	0.0%	206,634,275	0.0%	206,634,275	0.0%
LONG-TERM DEBT																	
LONG TERM LIABILITIES COVID-19	-	-	#DIV/0!	-	#DIV/0!	-	#DIV/0!	-	#DIV/0!	-	#DIV/0!	-	#DIV/0!	-	#DIV/0!	-	#DIV/0!
BONDS & MORTGAGES PAYABLE	438,669,100	418,647,828	-4.6%	418,831,254	0.0%	394,909,193	-5.7%	394,909,193	0.0%	394,909,193	0.0%	394,909,193	0.0%	394,909,193	0.0%	394,909,193	0.0%
CAPITAL LEASE OBLIGATIONS	-	-	#DIV/0!	1,162,611	#DIV/0!	1,162,611	0.0%	1,162,611	0.0%	1,162,611	0.0%	1,162,611	0.0%	1,162,611	0.0%	1,162,611	0.0%
OTHER LONG-TERM DEBT	-	-	#DIV/0!	-	#DIV/0!	-	#DIV/0!	-	#DIV/0!	-	#DIV/0!	-	#DIV/0!	-	#DIV/0!	-	#DIV/0!
TOTAL LONG-TERM DEBT	438,669,100	418,647,828	-4.6%	419,993,865	0.3%	396,071,804	-5.7%	396,071,804	0.0%	396,071,804	0.0%	396,071,804	0.0%	396,071,804	0.0%	396,071,804	0.0%
OTHER NONCURRENT LIABILITIES	71,693,432	69,469,463	-3.1%	67,303,398	-3.1%	67,303,398	0.0%	67,303,398	0.0%	67,303,398	0.0%	67,303,398	0.0%	67,303,398	0.0%	67,303,398	0.0%
TOTAL LIABILITIES	**804,497,004**	**701,373,655**	-12.8%	**771,930,676**	10.1%	**670,009,478**	-13.2%	**670,009,478**	0.0%	**670,009,478**	0.0%	**670,009,478**	0.0%	**670,009,478**	0.0%	**670,009,478**	0.0%
FUND BALANCE	1,022,476,409	1,125,401,355	10.1%	1,147,852,197	2.0%	1,218,386,310	6.1%	1,222,690,045	0.4%	1,228,809,307	0.5%	1,236,960,973	0.7%	1,247,216,178	0.8%	1,259,648,544	1.0%
TOTAL LIABILITIES AND FUND BALANCE	**1,826,973,413**	**1,826,775,010**	0.0%	**1,919,782,873**	5.1%	**1,888,395,787**	-1.6%	**1,892,699,523**	0.2%	**1,898,818,785**	0.3%	**1,906,970,451**	0.4%	**1,917,225,656**	0.5%	**1,929,658,022**	0.6%

THE UNIVERSITY OF VERMONT MEDICAL CENTER

CT Replacement

PAYER REVENUE REPORT

WITHOUT PROJECT

	2020 Actual	2021 Budget	% change	2021 Projection	% change	2022 Budget	% change	2023 Proposed Year 1	% change	2024 Proposed Year 2	% change	2025 Proposed Year 3	% change	2026 Proposed Year 4	% change	2027 Proposed Year 5	% change
Commercial																	
Hospital	807,916,615	1,357,195,307	68.0%	958,011,237	-29.4%	1,025,834,000	7.1%	1,119,184,894	9.1%	1,158,356,365	3.5%	1,198,898,838	3.5%	1,240,860,297	3.5%	1,284,290,408	3.5%
Physician	258,809,132	0	-100.0%	272,777,028	#DIV/0!	337,221,067	23.6%	367,908,184	9.1%	380,784,970	3.5%	394,112,444	3.5%	407,906,380	3.5%	422,183,103	3.5%
Total Revenue	1,066,725,747	1,357,195,307	27.2%	1,230,788,265	-9.3%	1,363,055,067	10.7%	1,487,093,078	9.1%	1,539,141,335	3.5%	1,593,011,282	3.5%	1,648,766,677	3.5%	1,706,473,511	3.5%
Allowances - Hospital	-219,527,510	-436,714,915	98.9%	-290,765,317	-33.4%	-283,429,475	-2.5%	-309,221,557	9.1%	-320,044,312	3.5%	-331,245,863	3.5%	-342,839,468	3.5%	-354,838,849	3.5%
Allowances - Physicians	-111,495,294	0	-100.0%	-120,886,689	#DIV/0!	-149,807,547	23.9%	-163,440,034	9.1%	-169,160,435	3.5%	-175,081,051	3.5%	-181,208,887	3.5%	-187,551,199	3.5%
Free Care	-15,524,709	-23,305,652	50.1%	-9,818,612	-57.9%	-15,046,387	53.2%	-16,415,608	9.1%	-16,990,155	3.5%	-17,584,810	3.5%	-18,200,279	3.5%	-18,837,288	3.5%
Bad Debt	-23,221,147	-35,954,810	54.8%	-22,264,080	-38.1%	-27,274,649	22.5%	-29,756,642	9.1%	-30,798,125	3.5%	-31,876,059	3.5%	-32,991,721	3.5%	-34,146,432	3.5%
Net Payer Revenue	696,957,086	861,219,930	23.6%	787,053,567	-8.6%	887,587,865	12.8%	968,259,235	9.1%	1,002,148,309	3.5%	1,037,223,499	3.5%	1,073,526,322	3.5%	1,111,099,743	3.5%
Fixed Prospective Payment & Reserves	181,765	-673,285	-470.4%	1,161,499	-272.5%	308,452	-73.4%	336,521	9.1%	348,299	3.5%	360,490	3.5%	373,107	3.5%	386,166	3.5%
Total Net Payer Revenue & Fixed Prospective Payment	697,138,851	860,546,645	23.4%	788,215,066	-8.4%	887,896,317	12.6%	968,595,756	9.1%	1,002,496,608	3.5%	1,037,583,989	3.5%	1,073,899,429	3.5%	1,111,485,909	3.5%
Reimbursement Rate - Commercial	65%	63%		64%		65%		65%		65%		65%		65%		65%	
Payer Mix - Commercial	58%	61%		61%		59%		59%		59%		59%		59%		59%	
Medicaid																	
Hospital	336,858,457	467,710,875	38.8%	359,052,495	-23.2%	429,849,610	19.7%	468,965,925	9.1%	485,379,732	3.5%	502,368,023	3.5%	519,950,904	3.5%	538,149,185	3.5%
Physician	89,352,927	0	-100.0%	101,363,673	#DIV/0!	117,341,351	15.8%	128,019,414	9.1%	132,500,094	3.5%	137,137,597	3.5%	141,937,413	3.5%	146,905,223	3.5%
Total Revenue	426,211,384	467,710,875	9.7%	460,416,168	-1.6%	547,190,962	18.8%	596,985,339	9.1%	617,879,826	3.5%	639,505,620	3.5%	661,888,317	3.5%	685,054,408	3.5%
Allowances - Hospital	-294,289,774	-410,529,274	39.5%	-321,193,998	-21.8%	-361,987,428	12.7%	-394,928,284	9.1%	-408,750,773	3.5%	-423,057,051	3.5%	-437,864,047	3.5%	-453,189,289	3.5%
Allowances - Physicians	-80,217,242	0	-100.0%	-91,639,827	#DIV/0!	-100,689,368	9.9%	-109,852,101	9.1%	-113,696,924	3.5%	-117,676,316	3.5%	-121,794,987	3.5%	-126,057,812	3.5%
Free Care	-183,570	0	-100.0%	-1,025,006	#DIV/0!	-2,902,042	183.1%	-3,166,128	9.1%	-3,276,942	3.5%	-3,391,635	3.5%	-3,510,342	3.5%	-3,633,204	3.5%
Bad Debt	-572,251	0	-100.0%	-485,846	#DIV/0!	-946,718	94.9%	-1,032,870	9.1%	-1,069,020	3.5%	-1,106,436	3.5%	-1,145,161	3.5%	-1,185,242	3.5%
Graduate Medical Education Payments-Phys.	19,658,830	30,000,000	52.6%	16,705,857	-44.3%	18,920,388	13.3%	20,642,143	9.1%	21,364,618	3.5%	22,112,380	3.5%	22,886,313	3.5%	23,687,334	3.5%
Graduate Medical Education Payments-Hosp	10,341,170	0	-100.0%	13,294,143	#DIV/0!	11,079,612	-16.7%	12,087,857	9.1%	12,510,932	3.5%	12,948,814	3.5%	13,402,023	3.5%	13,871,094	3.5%
Net Payer Revenue	80,948,547	87,181,601	7.7%	76,071,491	-12.7%	110,630,539	45.4%	120,735,958	9.1%	124,961,716	3.5%	129,335,376	3.5%	133,862,114	3.5%	138,547,288	3.5%
Fixed Prospective Payment & Reserves	55,792,403	42,930,283	-23.1%	59,634,430	38.9%	52,597,549	-11.8%	57,383,926	9.1%	59,392,363	3.5%	61,471,096	3.5%	63,622,584	3.5%	65,849,375	3.5%
Total Net Payer Revenue & Fixed Prospective Payment	136,740,950	130,111,884	-4.8%	135,705,921	4.3%	163,228,088	20.3%	178,119,884	9.1%	184,354,080	3.5%	190,806,472	3.5%	197,484,699	3.5%	204,396,663	3.5%
Reimbursement Rate - Medicaid	32%	28%		29%		30%		30%		30%		30%		30%		30%	
Payer Mix - Medicaid	11%	9%		10%		11%		11%		11%		11%		11%		11%	
Medicare																	
Hospital	1,039,889,814	1,441,697,788	38.6%	1,162,938,950	-19.3%	1,328,335,528	14.2%	1,449,214,061	9.1%	1,499,936,553	3.5%	1,552,434,332	3.5%	1,606,769,534	3.5%	1,663,006,468	3.5%
Physician	186,243,220	0	-100.0%	199,694,061	#DIV/0!	247,100,758	23.7%	269,586,927	9.1%	279,022,470	3.5%	288,788,256	3.5%	298,895,845	3.5%	309,357,200	3.5%
Total Revenue	1,226,133,034	1,441,697,788	17.6%	1,362,633,011	-5.5%	1,575,436,286	15.6%	1,718,800,988	9.1%	1,778,959,023	3.5%	1,841,222,589	3.5%	1,905,665,379	3.5%	1,972,363,667	3.5%
Allowances - Hospital	-823,951,564	-1,214,078,544	47.3%	-941,411,159	-22.5%	-1,049,792,429	11.5%	-1,145,323,540	9.1%	-1,185,409,864	3.5%	-1,226,899,209	3.5%	-1,269,840,682	3.5%	-1,314,285,105	3.5%
Allowances - Physicians	-150,975,376	0	-100.0%	-161,045,502	#DIV/0!	-203,142,311	26.1%	-221,628,261	9.1%	-229,385,250	3.5%	-237,413,734	3.5%	-245,723,215	3.5%	-254,323,527	3.5%
Free Care	-2,494,169	0	-100.0%	-3,594,779	#DIV/0!	-5,854,927	62.9%	-6,387,725	9.1%	-6,611,295	3.5%	-6,842,691	3.5%	-7,082,185	3.5%	-7,330,061	3.5%
Bad Debt	-4,439,363	0	-100.0%	-7,109,285	#DIV/0!	-10,309,778	45.0%	-11,247,968	9.1%	-11,641,647	3.5%	-12,049,104	3.5%	-12,470,823	3.5%	-12,907,302	3.5%
Net Payer Revenue	244,272,561	227,619,244	-6.8%	249,472,286	9.6%	306,336,842	22.8%	334,213,494	9.1%	345,910,967	3.5%	358,017,850	3.5%	370,548,475	3.5%	383,517,672	3.5%
Fixed Prospective Payment & Reserves	110,315,604	186,164,376	68.8%	111,171,086	-40.3%	131,974,389	18.7%	143,984,058	9.1%	149,023,500	3.5%	154,239,323	3.5%	159,637,699	3.5%	165,225,018	3.5%
Total Net Payer Revenue & Fixed Prospective Payment	354,588,166	413,783,620	16.7%	360,643,371	-12.8%	438,311,230	21.5%	478,197,552	9.1%	494,934,467	3.5%	512,257,173	3.5%	530,186,174	3.5%	548,742,690	3.5%
Reimbursement Rate - Medicare	29%	29%		26%		28%		28%		28%		28%		28%		28%	
Payer Mix - Medicare	30%	29%		28%		29%		29%		29%		29%		29%		29%	
Disproportionate Share Payments	11,260,268	11,214,283	-0.4%	11,223,480	0.1%	11,214,283	-0.1%	12,234,783	9.1%	12,663,000	3.5%	13,106,205	3.5%	13,564,922	3.5%	14,039,695	3.5%
Total Payer Revenue																	
Hospital	2,184,664,886	3,266,603,970	49.5%	2,480,002,682	-24.1%	2,784,019,138	12.3%	3,037,364,880	9.1%	3,143,672,650	3.5%	3,253,701,193	3.5%	3,367,580,735	3.5%	3,485,446,061	3.5%
Physician	534,405,279	0	-100.0%	573,834,762	#DIV/0!	701,663,177	22.3%	765,514,526	9.1%	792,307,534	3.5%	820,038,298	3.5%	848,739,638	3.5%	878,445,525	3.5%
Total Revenue	2,719,070,165	3,266,603,970	20.1%	3,053,837,444	-6.5%	3,485,682,315	14.1%	3,802,879,405	9.1%	3,935,980,184	3.5%	4,073,739,491	3.5%	4,216,320,373	3.5%	4,363,891,586	3.5%
Allowances - Hospital	-1,337,768,848	-2,061,322,732	54.1%	-1,553,370,474	-24.6%	-1,695,209,332	9.1%	-1,849,473,381	9.1%	-1,914,204,949	3.5%	-1,981,202,123	3.5%	-2,050,544,197	3.5%	-2,122,313,244	3.5%
Allowances - Physicians	-342,687,912	0	-100.0%	-373,572,018	#DIV/0!	-453,639,226	21.4%	-494,920,396	9.1%	-512,242,610	3.5%	-530,171,101	3.5%	-548,727,089	3.5%	-567,932,538	3.5%
Free Care	-18,202,448	-23,305,652	28.0%	-14,438,397	-38.0%	-23,803,356	64.9%	-25,969,461	9.1%	-26,878,392	3.5%	-27,819,136	3.5%	-28,792,806	3.5%	-29,800,554	3.5%
Bad Debt	-28,232,761	-35,954,810	27.4%	-29,859,212	-17.0%	-38,531,146	29.0%	-42,037,480	9.1%	-43,508,792	3.5%	-45,031,599	3.5%	-46,607,705	3.5%	-48,238,975	3.5%
Disproportionate Share Payments	11,260,268	11,214,283	-0.4%	11,223,480	0.1%	11,214,283	-0.1%	12,234,783	9.1%	12,663,000	3.5%	13,106,205	3.5%	13,564,922	3.5%	14,039,695	3.5%
Graduate Medical Education Payments_Phys.	19,658,830	30,000,000	52.6%	16,705,857	-44.3%	18,920,388	13.3%	20,642,143	9.1%	21,364,618	3.5%	22,112,380	3.5%	22,886,313	3.5%	23,687,334	3.5%
Graduate Medical Education Payments-Hosp	10,341,170	0	-100.0%	13,294,143	#DIV/0!	11,079,612	-16.7%	12,087,857	9.1%	12,510,932	3.5%	12,948,814	3.5%	13,402,023	3.5%	13,871,094	3.5%
Net Payer Revenue	1,033,438,463	1,187,235,059	14.9%	1,123,820,823	-5.3%	1,315,713,538	17.1%	1,435,443,470	9.1%	1,485,683,991	3.5%	1,537,682,931	3.5%	1,591,501,834	3.5%	1,647,204,398	3.5%
Fixed Prospective Payment & Reserves	166,289,772	228,421,374		171,967,015		184,880,390		201,704,505		208,764,163		216,070,909		223,633,390		231,460,559	
Total Net Payer Revenue & Fixed Prospective Payment	1,199,728,235	1,415,656,433		1,295,787,839		1,500,593,928		1,637,147,975		1,694,448,154		1,753,753,840		1,815,135,224		1,878,664,957	
Reimbursement Rate - All Payers	44%	43%		42%		43%		43%		43%		43%		43%		43%	

THE UNIVERSITY OF VERMONT MEDICAL CENTER

CT Replacement

PAYER REVENUE REPORT

PROJECT ONLY

Note: We have used hospital-wide reimbursement rate for each payer in "Project Only' table.

No "Other" payer category. Allocated Other (self pay, workers comp etc.) in Commercial

	2020	2021		2021		2022		2023		2024		2025		2026		2027	
	Actual	Budget	% change	Projection	% change	Budget	% change	Proposed Year 1	% change	Proposed Year 2	% change	Proposed Year 3	% change	Proposed Year 4	% change	Proposed Year 5	% change
Commercial + Other																	
Hospital			#DIV/0!		#DIV/0!		#DIV/0!	-	#DIV/0!	-	#DIV/0!	-	#DIV/0!		#DIV/0!	-	#DIV/0!
Physician			#DIV/0!		#DIV/0!		#DIV/0!	-	#DIV/0!		#DIV/0!	-	#DIV/0!		#DIV/0!		#DIV/0!
Total Revenue			#DIV/0!		#DIV/0!		#DIV/0!		#DIV/0!		#DIV/0!	#DIV/0!	#DIV/0!		#DIV/0!		#DIV/0!
Allowances - Hospital			#DIV/0!		#DIV/0!		#DIV/0!		#DIV/0!		#DIV/0!	0	#DIV/0!		#DIV/0!		#DIV/0!
Allowances - Physicians			#DIV/0!		#DIV/0!		#DIV/0!		#DIV/0!		#DIV/0!	0	#DIV/0!		#DIV/0!		#DIV/0!
Free Care							#DIV/0!		#DIV/0!		#DIV/0!		#DIV/0!				
Bad Debt							#DIV/0!		#DIV/0!		#DIV/0!		#DIV/0!				
Net Payer Revenue			#DIV/0!		#DIV/0!		#DIV/0!	-	#DIV/0!	-	0.0%	-	0.0%	-	0.0%	-	0.0%
Fixed Prospective Payment & Reserves																	
Total Net Payer Revenue & Fixed Prospective Payment								-		-		-		-		-	
Reimbursement Rate - Commercial	#DIV/0!	#DIV/0!		#DIV/0!		#DIV/0!											
Payer Mix - Commercial	#DIV/0!	#DIV/0!		#DIV/0!		#DIV/0!		#DIV/0!		#DIV/0!		#DIV/0!		#DIV/0!		#DIV/0!	
Medicaid																	
Hospital			#DIV/0!		#DIV/0!		#DIV/0!		#DIV/0!		#DIV/0!		#DIV/0!		#DIV/0!		#DIV/0!
Physician			#DIV/0!		#DIV/0!		#DIV/0!		#DIV/0!		#DIV/0!		#DIV/0!		#DIV/0!		#DIV/0!
Total Revenue			#DIV/0!		#DIV/0!		#DIV/0!		#DIV/0!		#DIV/0!		#DIV/0!		#DIV/0!		#DIV/0!
											#DIV/0!						
Allowances - Hospital			#DIV/0!		#DIV/0!		#DIV/0!		#DIV/0!		#DIV/0!		#DIV/0!		#DIV/0!		#DIV/0!
Allowances - Physicians			#DIV/0!		#DIV/0!		#DIV/0!		#DIV/0!		#DIV/0!		#DIV/0!		#DIV/0!		#DIV/0!
Free Care							#DIV/0!		#DIV/0!		#DIV/0!		#DIV/0!		#DIV/0!		#DIV/0!
Bad Debt							#DIV/0!		#DIV/0!		#DIV/0!		#DIV/0!		#DIV/0!		#DIV/0!
Graduate Medical Education Payments-Phys.			#DIV/0!		#DIV/0!		#DIV/0!		#DIV/0!		#DIV/0!		#DIV/0!		#DIV/0!		#DIV/0!
Graduate Medical Education Payments-Hosp			#DIV/0!		#DIV/0!		#DIV/0!		#DIV/0!		#DIV/0!		#DIV/0!		#DIV/0!		#DIV/0!
Net Payer Revenue			#DIV/0!		#DIV/0!		#DIV/0!		#DIV/0!		#DIV/0!		#DIV/0!		#DIV/0!		#DIV/0!
Fixed Prospective Payment & Reserves																	
Total Net Payer Revenue & Fixed Prospective Payment								-		-		-		-		-	
Reimbursement Rate - Medicaid	#DIV/0!	#DIV/0!		#DIV/0!		#DIV/0!											
Payer Mix - Medicaid	#DIV/0!	#DIV/0!		#DIV/0!		#DIV/0!		#DIV/0!		#DIV/0!		#DIV/0!		#DIV/0!		#DIV/0!	
Medicare																	
Hospital			#DIV/0!		#DIV/0!		#DIV/0!		#DIV/0!		#DIV/0!		#DIV/0!		#DIV/0!		#DIV/0!
Physician			#DIV/0!		#DIV/0!		#DIV/0!		#DIV/0!		#DIV/0!		#DIV/0!		#DIV/0!		#DIV/0!
Total Revenue			#DIV/0!		#DIV/0!		#DIV/0!	#DIV/0!	#DIV/0!	#DIV/0!					#DIV/0!		#DIV/0!
Allowances - Hospital			#DIV/0!		#DIV/0!		#DIV/0!		#DIV/0!		#DIV/0!		#DIV/0!		#DIV/0!		#DIV/0!
Allowances - Physicians			#DIV/0!		#DIV/0!		#DIV/0!		#DIV/0!		#DIV/0!		#DIV/0!		#DIV/0!		#DIV/0!
Free Care							#DIV/0!		#DIV/0!		#DIV/0!		#DIV/0!		#DIV/0!		#DIV/0!
Bad Debt							#DIV/0!		#DIV/0!		#DIV/0!		#DIV/0!		#DIV/0!		#DIV/0!
Net Payer Revenue			#DIV/0!		#DIV/0!		#DIV/0!	-	#DIV/0!	-							
Fixed Prospective Payment & Reserves																	
Total Net Payer Revenue & Fixed Prospective Payment								-		-		-		-		-	
Reimbursement Rate - Medicare	#DIV/0!	#DIV/0!		#DIV/0!		#DIV/0!											
Payer Mix - Medicare	#DIV/0!	#DIV/0!		#DIV/0!		#DIV/0!		#DIV/0!		#DIV/0!		#DIV/0!		#DIV/0!		#DIV/0!	
Disproportionate Share Payments			#DIV/0!		#DIV/0!		#DIV/0!		#DIV/0!		#DIV/0!		#DIV/0!		#DIV/0!		#DIV/0!
Total Payer Revenue																	
Hospital			#DIV/0!		#DIV/0!		#DIV/0!		#DIV/0!		#DIV/0!		#DIV/0!		#DIV/0!		#DIV/0!
Physician			#DIV/0!		#DIV/0!		#DIV/0!		#DIV/0!		#DIV/0!		#DIV/0!		#DIV/0!		#DIV/0!
Total Revenue			#DIV/0!		#DIV/0!		#DIV/0!		#DIV/0!		#DIV/0!		#DIV/0!		#DIV/0!		#DIV/0!
Allowances - Hospital			#DIV/0!		#DIV/0!		#DIV/0!		#DIV/0!		#DIV/0!		#DIV/0!		#DIV/0!		#DIV/0!
Allowances - Physicians			#DIV/0!		#DIV/0!		#DIV/0!		#DIV/0!		#DIV/0!		#DIV/0!		#DIV/0!		#DIV/0!
Free Care			#DIV/0!		#DIV/0!		#DIV/0!		#DIV/0!		#DIV/0!		#DIV/0!		#DIV/0!		#DIV/0!
Bad Debt			#DIV/0!		#DIV/0!		#DIV/0!		#DIV/0!		#DIV/0!		#DIV/0!		#DIV/0!		#DIV/0!
Disproportionate Share Payments			#DIV/0!		#DIV/0!		#DIV/0!		#DIV/0!		#DIV/0!		#DIV/0!		#DIV/0!		#DIV/0!
Graduate Medical Education Payments-Phys.			#DIV/0!		#DIV/0!		#DIV/0!		#DIV/0!		#DIV/0!		#DIV/0!		#DIV/0!		#DIV/0!
Graduate Medical Education Payments-Hosp			#DIV/0!		#DIV/0!		#DIV/0!		#DIV/0!		#DIV/0!		#DIV/0!		#DIV/0!		#DIV/0!
Net Payer Revenue			#DIV/0!		#DIV/0!		#DIV/0!		#DIV/0!		#DIV/0!		#DIV/0!	-	#DIV/0!		#DIV/0!
Fixed Prospective Payment & Reserves																	
Total Net Payer Revenue & Fixed Prospective Payment								-		-		-		-		-	
Reimbursement Rate - All Payers	#DIV/0!	#DIV/0!		#DIV/0!		#DIV/0!		#DIV/0!		#DIV/0!		#DIV/0!		#DIV/0!		#DIV/0!	

THE UNIVERSITY OF VERMONT MEDICAL CENTER

CT Replacement

CT Replacement

Note: This table requires no "fill-in" as it is populated automatically

PAYER REVENUE REPORT

WITH PROJECT

	2020 Actual	2021 Budget	% change	2021 Projection	% change	2022 Budget	% change	2023 Proposed Year 1	% change	2024 Proposed Year 2	% change	2025 Proposed Year 3	% change	2026 Proposed Year 4	% change	2027 Proposed Year 5	% change
Commercial																	
Hospital	807,916,615	1,357,195,307	68.0%	958,011,237	-29.4%	1,025,834,000	7.1%	1,119,184,894	9.1%	1,158,356,365	3.5%	1,198,898,838	3.5%	1,240,860,297	3.5%	1,284,290,408	3.5%
Physician	258,809,132	0	-100.0%	272,777,028	#DIV/0!	337,221,067	23.6%	367,908,184	9.1%	380,784,970	3.5%	394,112,444	3.5%	407,906,380	3.5%	422,183,103	3.5%
Total Revenue	1,066,725,747	1,357,195,307	27.2%	1,230,788,265	-9.3%	1,363,055,067	10.7%	1,487,093,078	9.1%	1,539,141,335	3.5%	1,593,011,282	3.5%	1,648,766,677	3.5%	1,706,473,511	3.5%
Allowances - Hospital	-219,527,510	-436,714,915	98.9%	-290,765,317	-33.4%	-283,429,475	-2.5%	-309,221,557	9.1%	-320,044,312	3.5%	-331,245,863	3.5%	-342,839,468	3.5%	-354,838,849	3.5%
Allowances - Physicians	-111,495,294	0	-100.0%	-120,886,689	#DIV/0!	-149,807,547	23.9%	-163,440,034	9.1%	-169,160,435	3.5%	-175,081,051	3.5%	-181,208,887	3.5%	-187,551,199	3.5%
Free Care	-15,524,709	-23,305,652	50.1%	-9,818,612	-57.9%	-15,046,387	53.2%	-16,415,608	9.1%	-16,990,155	3.5%	-17,584,810	3.5%	-18,200,279	3.5%	-18,837,288	3.5%
Bad Debt	-23,221,147	-35,954,810	54.8%	-22,264,080	-38.1%	-27,274,649	22.5%	-29,756,642	9.1%	-30,798,125	3.5%	-31,876,059	3.5%	-32,991,721	3.5%	-34,146,432	3.5%
Net Payer Revenue	696,957,086	861,219,930	23.6%	787,053,567	-8.6%	887,497,008	12.8%	968,259,235	9.1%	1,002,148,309	3.5%	1,037,223,499	3.5%	1,073,526,322	3.5%	1,111,099,743	3.5%
Fixed Prospective Payment & Reserves	181,765	-673,285	-470.4%	1,161,499	-272.5%	308,452	-73.4%	336,521	9.1%	348,299	3.5%	360,490	3.5%	373,107	3.5%	386,166	3.5%
Total Net Payer Revenue & Fixed Prospective Payment	697,138,851	860,546,645	23.4%	788,215,066	-8.4%	887,805,460	12.6%	968,595,756	9.1%	1,002,496,608	3.5%	1,037,583,989	3.5%	1,073,899,429	3.5%	1,111,485,909	0
Reimbursement Rate - Commercial	65%	63%		64%		65%		65%		65%		65%		65%		65%	
Payer Mix - Commercial	58%	61%		61%		59%		59%		59%		59%		59%		59%	
Medicaid																	
Hospital	336,858,457	467,710,875	38.8%	359,052,495	-23.2%	429,849,610	19.7%	468,965,925	9.1%	485,379,732	3.5%	502,368,023	3.5%	519,950,904	3.5%	538,149,185	3.5%
Physician	89,352,927	0	-100.0%	101,363,673	#DIV/0!	117,341,351	15.8%	128,019,414	9.1%	132,500,094	3.5%	137,137,597	3.5%	141,937,413	3.5%	146,905,223	3.5%
Total Revenue	426,211,384	467,710,875	9.7%	460,416,168	-1.6%	547,190,962	18.8%	596,985,339	9.1%	617,879,826	3.5%	639,505,620	3.5%	661,888,317	3.5%	685,054,408	3.5%
Allowances - Hospital	-294,289,774	-410,529,274	39.5%	-321,193,998	-21.8%	-361,987,428	12.7%	-394,928,284	9.1%	-408,750,773	3.5%	-423,057,051	3.5%	-437,864,047	3.5%	-453,189,289	3.5%
Allowances - Physicians	-80,217,242	0	-100.0%	-91,639,827	#DIV/0!	-100,689,368	9.9%	-109,852,101	9.1%	-113,696,924	3.5%	-117,676,316	3.5%	-121,794,987	3.5%	-126,057,812	3.5%
Free Care	-183,570	0	-100.0%	-1,025,006	#DIV/0!	-2,902,042	183.1%	-3,166,128	9.1%	-3,276,942	3.5%	-3,391,635	3.5%	-3,510,342	3.5%	-3,633,204	3.5%
Bad Debt	-572,251	0	-100.0%	-485,846	#DIV/0!	-946,718	94.9%	-1,032,870	9.1%	-1,069,020	3.5%	-1,106,436	3.5%	-1,145,161	3.5%	-1,185,242	3.5%
Graduate Medical Education Payments-Phys.	19,658,830	30,000,000	52.6%	16,705,857	-44.3%	18,920,388	13.3%	20,642,143	9.1%	21,364,618	3.5%	22,112,380	3.5%	22,886,313	3.5%	23,687,334	3.5%
Graduate Medical Education Payments-Hosp	10,341,170	0	-100.0%	13,294,143	#DIV/0!	11,079,612	-16.7%	12,087,857	9.1%	12,510,932	3.5%	12,948,814	3.5%	13,402,023	3.5%	13,871,094	3.5%
Net Payer Revenue	80,948,547	87,181,601	7.7%	76,071,491	-12.7%	110,665,406	45.5%	120,735,958	9.1%	124,961,716	3.5%	129,335,376	3.5%	133,862,114	3.5%	138,547,288	3.5%
Fixed Prospective Payment & Reserves	55,792,403	42,930,283		59,634,430		52,597,549		57,383,926		59,392,363		61,471,096		63,622,584	3.5%	65,849,375	
Total Net Payer Revenue & Fixed Prospective Payment	136,740,950	130,111,884		135,705,921		163,262,955		178,119,884		184,354,080		190,806,472		197,484,699	3.5%	204,396,663	
Reimbursement Rate - Medicaid	32%	28%		29%		30%		30%		30%		30%		30%		30%	
Payer Mix - Medicaid	11%	9%		10%		11%		11%		11%		11%		11%		11%	
Medicare																	
Hospital	1,039,889,814	1,441,697,788	38.6%	1,162,938,950	-19.3%	1,328,335,528	14.2%	1,449,214,061	9.1%	1,499,936,553	3.5%	1,552,434,332	3.5%	1,606,769,534	3.5%	1,663,006,468	3.5%
Physician	186,243,220	0	-100.0%	199,694,061	#DIV/0!	247,100,758	23.7%	269,586,927	9.1%	279,022,470	3.5%	288,788,256	3.5%	298,895,845	3.5%	309,357,200	3.5%
Total Revenue	1,226,133,034	1,441,697,788	17.6%	1,362,633,011	-5.5%	1,575,436,286	15.6%	1,718,800,988	9.1%	1,778,959,023	3.5%	1,841,222,589	3.5%	1,905,665,379	3.5%	1,972,363,667	3.5%
Allowances - Hospital	-823,951,564	-1,214,078,544	47.3%	-941,411,159	-22.5%	-1,049,792,429	11.5%	-1,145,323,540	9.1%	-1,185,409,864	3.5%	-1,226,899,209	3.5%	-1,269,840,682	3.5%	-1,314,285,105	3.5%
Allowances - Physicians	-150,975,376	0	-100.0%	-161,045,502	#DIV/0!	-203,142,311	26.1%	-221,628,261	9.1%	-229,385,250	3.5%	-237,413,734	3.5%	-245,723,215	3.5%	-254,323,527	3.5%
Free Care	-2,494,169	0	-100.0%	-3,594,779	#DIV/0!	-5,854,927	62.9%	-6,387,725	9.1%	-6,611,295	3.5%	-6,842,691	3.5%	-7,082,185	3.5%	-7,330,061	3.5%
Bad Debt	-4,439,363	0	-100.0%	-7,109,285	#DIV/0!	-10,309,778	45.0%	-11,247,968	9.1%	-11,641,647	3.5%	-12,049,104	3.5%	-12,470,823	3.5%	-12,907,302	3.5%
Net Payer Revenue	244,272,561	227,619,244	-6.8%	249,472,286	9.6%	306,336,842	22.8%	334,213,494	9.1%	345,910,967	3.5%	358,017,850	3.5%	370,548,475	3.5%	383,517,672	3.5%
Fixed Prospective Payment & Reserves	110,315,604	186,164,376		111,171,086		131,974,389		143,984,058		149,023,500		154,239,323		159,637,699	3.5%	165,225,018	
Total Net Payer Revenue & Fixed Prospective Payment	354,588,166	413,783,620		360,643,371		438,311,230		478,197,552		494,934,467		512,257,173		530,186,174	3.5%	548,742,690	
Reimbursement Rate - Medicare	29%	29%		26%		28%		28%		28%		28%		28%		28%	
Payer Mix - Medicare	30%	29%		28%		29%		29%		29%		29%		29%		29%	
Disproportionate Share Payments	11,260,268	11,214,283	-0.4%	11,223,480	0.1%	11,214,283	-0.1%	12,234,783	9.1%	12,663,000	3.5%	13,106,205	3.5%	13,564,922	3.5%	14,039,695	3.5%
Total Payer Revenue																	
Hospital	2,184,664,886	3,266,603,970	49.5%	2,480,002,682	-24.1%	2,784,019,138	12.3%	3,037,364,880	9.1%	3,143,672,650	3.5%	3,253,701,193	3.5%	3,367,580,735	3.5%	3,485,446,061	3.5%
Physician	534,405,279	0	-100.0%	573,834,762	#DIV/0!	701,663,177	22.3%	765,514,526	9.1%	792,307,534	3.5%	820,038,298	3.5%	848,739,638	3.5%	878,445,525	3.5%
Total Revenue	2,719,070,165	3,266,603,970	20.1%	3,053,837,444	-6.5%	3,485,682,315	14.1%	3,802,879,405	9.1%	3,935,980,184	3.5%	4,073,739,491	3.5%	4,216,320,373	3.5%	4,363,891,586	3.5%
Allowances - Hospital	-1,337,768,848	-2,061,322,732	54.1%	-1,553,370,474	-24.6%	-1,695,209,332	9.1%	-1,849,473,381	9.1%	-1,914,204,949	3.5%	-1,981,202,123	3.5%	-2,050,544,197	3.5%	-2,122,313,244	3.5%
Allowances - Physicians	-342,687,912	0	-100.0%	-373,572,018	#DIV/0!	-453,639,226	21.4%	-494,920,396	9.1%	-512,242,610	3.5%	-530,171,101	3.5%	-548,727,089	3.5%	-567,932,538	3.5%
Free Care	-18,202,448	-23,305,652	28.0%	-14,438,397	-38.0%	-23,803,356	64.9%	-25,969,461	9.1%	-26,878,392	3.5%	-27,819,136	3.5%	-28,792,806	3.5%	-29,800,554	3.5%
Bad Debt	-28,232,761	-35,954,810	27.4%	-29,859,212	-17.0%	-38,531,146	29.0%	-42,037,480	9.1%	-43,508,792	3.5%	-45,031,599	3.5%	-46,607,705	3.5%	-48,238,975	3.5%
Disproportionate Share Payments	11,260,268	11,214,283	-0.4%	11,223,480	0.1%	11,214,283	-0.1%	12,234,783	9.1%	12,663,000	3.5%	13,106,205	3.5%	13,564,922	3.5%	14,039,695	3.5%
Graduate Medical Education Payments-Phys.	19,658,830	30,000,000	52.6%	16,705,857	-44.3%	18,920,388	13.3%	20,642,143	9.1%	21,364,618	3.5%	22,112,380	3.5%	22,886,313	3.5%	23,687,334	3.5%
Graduate Medical Education Payments-Hosp	10,341,170	0	-100.0%	13,294,143	#DIV/0!	11,079,612	-16.7%	12,087,857	9.1%	12,510,932	3.5%	12,948,814	3.5%	13,402,023	3.5%	13,871,094	3.5%
Net Payer Revenue	1,033,438,463	1,187,235,059	14.9%	1,123,820,823	-5.3%	1,315,713,538	17.1%	1,435,443,470	9.1%	1,485,683,991	3.5%	1,537,682,931	3.5%	1,591,501,834	3.5%	1,647,204,398	3.5%
Fixed Prospective Payment & Reserves	166,289,772	228,421,374		171,967,015		184,880,390		201,704,505		208,764,163		216,070,909		223,633,390		231,460,559	
Total Net Payer Revenue & Fixed Prospective Payment	1,199,728,235	1,415,656,433		1,295,787,839		1,500,593,928		1,637,147,975		1,694,448,154		1,753,753,840		1,815,135,224		1,878,664,957	
Reimbursement Rate - All Payers	38%	36%		37%		38%		38%		38%		38%		38%		38%	

The University of Vermont Medical Center

CT Replacement

UTILIZATION PROJECTIONS--TABLE 7

WITHOUT PROJECT

	2020 Actual	2021 Budget	% change	2021 Projection	% change	2022 Budget	% change	Proposed Yr 1 2023	% change	Proposed Yr 2 2024	% change	Proposed Yr 3 2025	% change	Proposed Yr 4 2026	% change	Proposed Yr 5 2027	% change
Inpatient Utilization																	
Acute Beds (Staffed)	433	-	-100.0%	450	#DIV/0!	450	0.0%	450	0.0%	450	0.0%	450	0.0%	450	0.0%	450	0.0%
Acute Admissions	19,812	-	-100.0%	19,140	#DIV/0!	21,231	10.9%	21,231	0.0%	21,231	0.0%	21,231	0.0%	21,231	0.0%	21,231	0.0%
Acute Patient Days	118,878	-	-100.0%	119,160	#DIV/0!	124,288	4.3%	124,288	0.0%	124,288	0.0%	124,288	0.0%	124,288	0.0%	124,288	0.0%
Acute Average Length Of Stay	6.01	-	-100.0%	6.23	#DIV/0!	5.85	-6.0%	5.85	0.0%	5.85	0.0%	5.85	0.0%	5.85	0.0%	5.85	0.0%
Outpatient																	
All Outpatient Visits	-	-	#DIV/0!	-	#DIV/0!	-	#DIV/0!		#DIV/0!		#DIV/0!		#DIV/0!		#DIV/0!		#DIV/0!
Physician Office Visits	624,305	-	-100.0%	588,612	#DIV/0!	647,412	10.0%	647,412	0.0%	647,412	0.0%	647,412	0.0%	647,412	0.0%	647,412	0.0%
Ancillary																	
All Operating Room Procedure	37,976	-	-100.0%	42,392	#DIV/0!	47,413	11.8%	47,413	0.0%	47,413	0.0%	47,413	0.0%	47,413	0.0%	47,413	0.0%
All Operating Room Cases	15,758	-	-100.0%	32,220	#DIV/0!	39,616	23.0%	39,616	0.0%	39,616	0.0%	39,616	0.0%	39,616	0.0%	39,616	0.0%
Emergency Room Visits	54,022	-	-100.0%	46,217	#DIV/0!	57,000	23.3%	57,000	0.0%	57,000	0.0%	57,000	0.0%	57,000	0.0%	57,000	0.0%
Cat Scan Procedures	50,744	-	-100.0%	51,439	#DIV/0!	58,869	14.4%	58,869	0.0%	58,869	0.0%	58,869	0.0%	58,869	0.0%	58,869	0.0%
Magnetic Resonance Image Exams	16,967	-	-100.0%	15,991	#DIV/0!	21,174	32.4%	21,174	0.0%	21,174	0.0%	21,174	0.0%	21,174	0.0%	21,174	0.0%
Nuclear Medicine Procedures	6,029	-	-100.0%	5,904	#DIV/0!	7,043	19.3%	7,043	0.0%	7,043	0.0%	7,043	0.0%	7,043	0.0%	7,043	0.0%
Radiology - Diagnostic Procedures	150,785	-	-100.0%	141,516	#DIV/0!	182,671	29.1%	182,671	0.0%	182,671	0.0%	182,671	0.0%	182,671	0.0%	182,671	0.0%
Laboratory Tests	2,207,075	-	-100.0%	2,367,185	#DIV/0!	2,448,931	3.5%	2,448,931	0.0%	2,448,931	0.0%	2,448,931	0.0%	2,448,931	0.0%	2,448,931	0.0%
			#DIV/0!		#DIV/0!		#DIV/0!		#DIV/0!		#DIV/0!		#DIV/0!		#DIV/0!		#DIV/0!
			#DIV/0!		#DIV/0!		#DIV/0!		#DIV/0!		#DIV/0!		#DIV/0!		#DIV/0!		#DIV/0!
Adjusted Statistics																	
Adjusted Admissions	56,679	-	-100.0%	-	#DIV/0!	-	#DIV/0!		#DIV/0!		#DIV/0!		#DIV/0!		#DIV/0!		#DIV/0!
Adjusted Days	339,751	-	-100.0%	-	#DIV/0!	-	#DIV/0!		#DIV/0!		#DIV/0!		#DIV/0!		#DIV/0!		#DIV/0!

The University of Vermont Medical Center

CT Replacement

UTILIZATION PROJECTIONS--TABLE 7

PROJECT ONLY

	2020 Actual	2021 Budget	% change	2021 Projection	% change	2022 Budget	% change	Proposed Yr 1 2023	% change	Proposed Yr 2 2024	% change	Proposed Yr 3 2025	% change	Proposed Yr 4 2026	% change	Proposed Yr 5 2027	% change
Inpatient Utilization																	
Acute Beds (Staffed)			#DIV/0!		#DIV/0!		#DIV/0!		#DIV/0!		#DIV/0!		#DIV/0!		#DIV/0!		#DIV/0!
Acute Admissions			#DIV/0!		#DIV/0!		#DIV/0!		#DIV/0!		#DIV/0!		#DIV/0!		#DIV/0!		#DIV/0!
Acute Patient Days			#DIV/0!		#DIV/0!		#DIV/0!		#DIV/0!		#DIV/0!		#DIV/0!		#DIV/0!		#DIV/0!
Acute Average Length Of Stay			#DIV/0!		#DIV/0!		#DIV/0!		#DIV/0!		#DIV/0!		#DIV/0!		#DIV/0!		#DIV/0!
Outpatient																	
All Outpatient Visits			#DIV/0!		#DIV/0!		#DIV/0!		#DIV/0!		#DIV/0!		#DIV/0!		#DIV/0!		#DIV/0!
Physician Office Visits			#DIV/0!		#DIV/0!		#DIV/0!		#DIV/0!		#DIV/0!		#DIV/0!		#DIV/0!		#DIV/0!
Ancillary																	
All Operating Room Procedure			#DIV/0!		#DIV/0!		#DIV/0!		#DIV/0!		#DIV/0!		#DIV/0!		#DIV/0!		#DIV/0!
All Operating Room Cases			#DIV/0!		#DIV/0!		#DIV/0!		#DIV/0!		#DIV/0!		#DIV/0!		#DIV/0!		#DIV/0!
Emergency Room Visits			#DIV/0!		#DIV/0!		#DIV/0!		#DIV/0!		#DIV/0!		#DIV/0!		#DIV/0!		#DIV/0!
Cat Scan Procedures			#DIV/0!		#DIV/0!		#DIV/0!		#DIV/0!		#DIV/0!		#DIV/0!		#DIV/0!		#DIV/0!
Magnetic Resonance Image Exams			#DIV/0!		#DIV/0!		#DIV/0!		#DIV/0!		#DIV/0!		#DIV/0!		#DIV/0!		#DIV/0!
Nuclear Medicine Procedures			#DIV/0!		#DIV/0!		#DIV/0!		#DIV/0!		#DIV/0!		#DIV/0!		#DIV/0!		#DIV/0!
Radiology - Diagnostic Procedures			#DIV/0!		#DIV/0!		#DIV/0!		#DIV/0!		#DIV/0!		#DIV/0!		#DIV/0!		#DIV/0!
Laboratory Tests			#DIV/0!		#DIV/0!		#DIV/0!		#DIV/0!		#DIV/0!		#DIV/0!		#DIV/0!		#DIV/0!
			#DIV/0!		#DIV/0!		#DIV/0!		#DIV/0!		#DIV/0!		#DIV/0!		#DIV/0!		#DIV/0!
			#DIV/0!		#DIV/0!		#DIV/0!		#DIV/0!		#DIV/0!		#DIV/0!		#DIV/0!		#DIV/0!
Adjusted Statistics																	
Adjusted Admissions			#DIV/0!		#DIV/0!		#DIV/0!		#DIV/0!		#DIV/0!		#DIV/0!		#DIV/0!		#DIV/0!
Adjusted Days			#DIV/0!		#DIV/0!		#DIV/0!		#DIV/0!		#DIV/0!		#DIV/0!		#DIV/0!		#DIV/0!

The University of Vermont Medical Center

CT Replacement

UTILIZATION PROJECTIONS--TABLE 7

Note: This table requires no "fill-in" as it is populated automatically

WITH PROJECT

	2020 Actual	2021 Budget	% change	2021 Projection	% change	2022 Budget	% change	Proposed Yr 1 2023	% change	Proposed Yr 2 2024	% change	Proposed Yr 3 2025	% change	Proposed Yr 4 2026	% change	Proposed Yr 5 2027	% change
Inpatient Utilization																	
Acute Beds (Staffed)	433	-	-100.0%	450	#DIV/0!	450	0.0%	450	0.0%	450	0.0%	450	0.0%	450	0.0%	450	0.0%
Acute Admissions	19,812	-	-100.0%	19,140	#DIV/0!	21,231	10.9%	21,231	0.0%	21,231	0.0%	21,231	0.0%	21,231	0.0%	21,231	0.0%
Acute Patient Days	118,878	-	-100.0%	119,160	#DIV/0!	124,288	4.3%	124,288	0.0%	124,288	0.0%	124,288	0.0%	124,288	0.0%	124,288	0.0%
Acute Average Length Of Stay	6	-	-100.0%	6	#DIV/0!	6	-6.0%	6	0.0%	6	0.0%	6	0.0%	6	0.0%	6	0.0%
Outpatient																	
All Outpatient Visits	-	-	#DIV/0!	-	#DIV/0!	-	#DIV/0!	-	#DIV/0!	-	#DIV/0!	-	#DIV/0!	-	#DIV/0!	-	#DIV/0!
Physician Office Visits	624,305	-	-100.0%	588,612	#DIV/0!	647,412	10.0%	647,412	0.0%	647,412	0.0%	647,412	0.0%	647,412	0.0%	647,412	0.0%
Ancillary																	
All Operating Room Procedure	37,976	-	-100.0%	42,392	#DIV/0!	47,413	11.8%	47,413	0.0%	47,413	0.0%	47,413	0.0%	47,413	0.0%	47,413	0.0%
All Operating Room Cases	15,758	-	-100.0%	32,220	#DIV/0!	39,616	23.0%	39,616	0.0%	39,616	0.0%	39,616	0.0%	39,616	0.0%	39,616	0.0%
Emergency Room Visits	54,022	-	-100.0%	46,217	#DIV/0!	57,000	23.3%	57,000	0.0%	57,000	0.0%	57,000	0.0%	57,000	0.0%	57,000	0.0%
Cat Scan Procedures	50,744	-	-100.0%	51,439	#DIV/0!	58,869	14.4%	58,869	0.0%	58,869	0.0%	58,869	0.0%	58,869	0.0%	58,869	0.0%
Magnetic Resonance Image Exams	16,967	-	-100.0%	15,991	#DIV/0!	21,174	32.4%	21,174	0.0%	21,174	0.0%	21,174	0.0%	21,174	0.0%	21,174	0.0%
Nuclear Medicine Procedures	6,029	-	-100.0%	5,904	#DIV/0!	7,043	19.3%	7,043	0.0%	7,043	0.0%	7,043	0.0%	7,043	0.0%	7,043	0.0%
Radiology - Diagnostic Procedures	150,785	-	-100.0%	141,516	#DIV/0!	182,671	29.1%	182,671	0.0%	182,671	0.0%	182,671	0.0%	182,671	0.0%	182,671	0.0%
Laboratory Tests	2,207,075	-	-100.0%	2,367,185	#DIV/0!	2,448,931	3.5%	2,448,931	0.0%	2,448,931	0.0%	2,448,931	0.0%	2,448,931	0.0%	2,448,931	0.0%
	-	-	#DIV/0!	-	#DIV/0!	-	#DIV/0!	-	#DIV/0!	-	#DIV/0!	-	#DIV/0!	-	#DIV/0!	-	#DIV/0!
	-	-	#DIV/0!	-	#DIV/0!	-	#DIV/0!	-	#DIV/0!	-	#DIV/0!	-	#DIV/0!	-	#DIV/0!	-	#DIV/0!
Adjusted Statistics																	
Adjusted Admissions	56,679	-	-100.0%	-	#DIV/0!	-	#DIV/0!	-	#DIV/0!	-	#DIV/0!	-	#DIV/0!	-	#DIV/0!	-	#DIV/0!
Adjusted Days	339,751	-	-100.0%	-	#DIV/0!	-	#DIV/0!	-	#DIV/0!	-	#DIV/0!	-	#DIV/0!	-	#DIV/0!	-	#DIV/0!

THE UNIVERSITY OF VERMONT MEDICAL CENTER

CT Replacement

STAFFING REPORT - TABLE 8

WITHOUT PROJECT

	2020 Actual	2021 Budget	% change	2021 Projection	% change	2022 Budget	% change	Proposed Year 1 2023	% change	Proposed Year 2 2024	% change	Proposed Year 3 2025	% change	Proposed Year 4 2026	% change	Proposed Year 5 2027	% change
PHYSICIAN FTEs	**623.9**	**647.5**	3.8%	**631.6**	-2.5%	**648.3**	2.6%	**648.3**	0.0%	**648.3**	0.0%	**648.3**	0.0%	**648.3**	0.0%	**648.3**	0.0%
TRAVELERS	135.7	-	-100.0%	164.2	#DIV/0!	80.0	-51.3%	**80.0**	0.0%	**80.0**	0.0%	**80.0**	0.0%	**80.0**	0.0%	**80.0**	0.0%
Residents & Fellows	348.3	-	-100.0%	350.9	#DIV/0!	369.2	5.2%	**369.2**	0.0%	**369.2**	0.0%	**369.2**	0.0%	**369.2**	0.0%	**369.2**	0.0%
MLPs	230.9	-	-100.0%	235.7	#DIV/0!	260.1	10.4%	**260.1**	0.0%	**260.1**	0.0%	**260.1**	0.0%	**260.1**	0.0%	**260.1**	0.0%
Non-MD FTEs	5,862.0	6,834.4	16.6%	5,983.0	-12.5%	6,933.1	15.9%	**6,933.1**	0.0%	**6,933.1**	0.0%	**6,933.1**	0.0%	**6,933.1**	0.0%	**6,933.1**	0.0%
TOTAL NON-MD FTEs	**6,441.1**	**6,834.4**	6.1%	**6,569.6**	-3.9%	**7,562.4**	15.1%	**7,562.4**	0.0%	**7,562.4**	0.0%	**7,562.4**	0.0%	**7,562.4**	0.0%	**7,562.4**	0.0%

Note: Mid-Level Providers and Residents are now included in Non-MD Employees, prior to 2013 Actual they were included in Physician FTEs

STAFFING REPORT - TABLE 8

PROJECT ONLY

	2020 Actual	2021 Budget	% change	2021 Projection	% change	2022 Budget	% change	Proposed Year 1 2023	% change	Proposed Year 2 2024	% change	Proposed Year 3 2025	% change	Proposed Year 4 2026	% change	Proposed Year 5 2027	% change
PHYSICIAN FTEs			#DIV/0!		#DIV/0!		#DIV/0!	-	#DIV/0!	-	#DIV/0!	-	#DIV/0!	-	#DIV/0!	-	#DIV/0!
TRAVELERS			#DIV/0!		#DIV/0!		#DIV/0!		#DIV/0!		#DIV/0!		#DIV/0!		#DIV/0!		#DIV/0!
Residents & Fellows			#DIV/0!		#DIV/0!		#DIV/0!		#DIV/0!		#DIV/0!		#DIV/0!		#DIV/0!		#DIV/0!
MLPs			#DIV/0!		#DIV/0!		#DIV/0!		#DIV/0!		#DIV/0!		#DIV/0!		#DIV/0!		#DIV/0!
Non-MD FTEs			#DIV/0!		#DIV/0!		#DIV/0!	-	#DIV/0!	-	#DIV/0!	-	#DIV/0!	-	#DIV/0!	-	#DIV/0!
TOTAL NON-MD FTEs	-	-	#DIV/0!	-	#DIV/0!	-	#DIV/0!	-	#DIV/0!	-	#DIV/0!	-	#DIV/0!	-	#DIV/0!	-	#DIV/0!

Note: Mid-Level Providers and Residents are now included in Non-MD Employees, prior to 2013 Actual they were included in Physician FTEs

Note: This table requires no "fill-in" as it is populated automatically

STAFFING REPORT - TABLE 8

WITH PROJECT

	2020 Actual	2021 Budget	% change	2021 Projection	% change	2022 Budget	% change	Proposed Year 1 2023	% change	Proposed Year 2 2024	% change	Proposed Year 3 2025	% change	Proposed Year 4 2026	% change	Proposed Year 5 2027	% change
PHYSICIAN FTEs	**623.9**	**647.5**	3.8%	**631.6**	-2.5%	**648.3**	2.6%	**648.3**	0.0%	**648.3**	0.0%	**648.3**	0.0%	**648.3**	0.0%	**648.3**	0.0%
TRAVELERS	135.7	-	-100.0%	164.2	#DIV/0!	80.0	-51.3%	80.0	0.0%	80.0	0.0%	80.0	0.0%	80.0	0.0%	80.0	0.0%
Residents & Fellows	348.3	-	-100.0%	350.9	#DIV/0!	369.2	5.2%	369.2	0.0%	369.2	0.0%	369.2	0.0%	369.2	0.0%	369.2	0.0%
MLPs	230.9	-	-100.0%	235.7	#DIV/0!	260.1	10.4%	260.1	0.0%	260.1	0.0%	260.1	0.0%	260.1	0.0%	260.1	0.0%
Non-MD FTEs	5,862.0	6,834.4	16.6%	5,983.0	-12.5%	6,933.1	15.9%	6,933.1	0.0%	6,933.1	0.0%	6,933.1	0.0%	6,933.1	0.0%	6,933.1	0.0%
TOTAL NON-MD FTEs	**6,441.1**	**6,834.4**	6.1%	**6,569.6**	-3.9%	**7,562.4**	15.1%	**7,562.4**	0.0%	**7,562.4**	0.0%	**7,562.4**	0.0%	**7,562.4**	0.0%	**7,562.4**	0.0%

Note: Mid-Level Providers and Residents are now included in Non-MD Employees, prior to 2013 Actual they were included in Physician FTEs

The University of Vermont Medical Center

Key Indicators

Flex Monitoring/Fitch Solutions 2019

	Northeast CAH	U.S. CAH	Fitch Solutions- Northern NE	Fitch Solutions- Northeast	2020 Actuals	2021 Actuals	2022 Projection	2022 Budget
Liquidity								
Days Cash on Hand					193	0	185	185
Operating Margin %					-0.3%	3.4%	3.0%	3.0%
Debt								
Long Term Debt to Capitalization					30.0%	0.0%	24.6%	24.6%
Age of Plant					11.6	0.0	12.8	12.8
Capital Expenditures to Depreciation	N/A	N/A	N/A	N/A	21%	0%	78%	78%
Utilization								
All Outpatient Visits	N/A	N/A	N/A	N/A	0	0	0	0
Physician Office Visits	N/A	N/A	N/A	N/A	624,305	0	647,412	647,412
Clinic Visits	N/A	N/A	N/A	N/A	0	0	0	0
Adjusted Admissions	N/A	N/A	N/A	N/A	56,645	0	0	0
Acute Admissions	N/A	N/A	N/A	N/A	19,812	0	21,231	21,231
Total Admissions	N/A	N/A	N/A	N/A	22,189	0	23,962	23,962
Cost								
Capital Cost % of Total Expense					5.7%	5.1%	5.2%	5.2%
Cost per Adjusted Admission	N/A				$25,812	$0	$0	$0
Cost Per Adjusted Admissions Increase						-100.0%	#DIV/0!	#DIV/0!
Employed								
Non-MD FTEs	N/A	N/A	N/A	N/A	6,441	0	6,933	6,933
Physician FTEs	N/A	N/A	N/A	N/A	624	0	648	648
Productivity								
FTEs per 100 Adj Discharges	N/A	N/A	N/A	N/A	11.4	0.0	0.0	0.0
Overhead Expense w/ fringe, as a % of Total Operating Exp	N/A	N/A	N/A	N/A	40.7%	0.0%	0.0%	0.0%
Bad Debt % of Gross Revenue	N/A	N/A	N/A	N/A	1.0%	0.0%	1.1%	1.1%
Free Care % of Gross Revenue	N/A	N/A	N/A	N/A	0.7%	0.0%	0.7%	0.7%

Exhibit 2
FGI Guidelines Chart
Essex APC

CON Standard 1.12 – Compliance with 2018 FGI Guidelines for Design and Construction of Outpatient Facilities Sections 2.13 Specific Requirements for Mobile/Transportable Medical Units

FGI Guideline Section Number	FGI Guideline Section Title	FGI Requirement	How Addressed by the Proposed Project
2.13-1 2.13-1.1 2.13-1.1.1 2.13-1.1.1.1 2.13-1.1.1.2 2.13-1.1.1.3	General Application Applicable Medical Units	This chapter shall be applied to mobile/transportable medical units that are used on a temporary basis. This chapter shall not be applied to mobile/transportable medical units placed into service as a result of a civil or local emergency or catastrophe. This chapter shall not be applied to modular/relocatable medical units that are prefabricated and finished off-site and transported to a permanent foundation on-site that cannot be readily moved.	This chapter applies to this project.
2.13-1.1.2 2.13-1.1.2.1	Medical Unit Type Designations Class 1 medical units	(1) Class 1 mobile/transportable medical units shall meet the requirements of one of the following:	This mobile unit will be classified as a Class 1 imaging room. These mobile units have been designed to meet these requirements.

		(a) An examination room as described in Section 2.1-3.2.1 (Examination Rooms) (b) A treatment room as described in Section 2.8-3.4 (Treatment Room or Area) (b) A Class 1 imaging room as described in Section 2.1-3.5.1.2 (Imaging room classification) (2) Provision of medical services for both inpatients and outpatients shall be permitted in Class 1 medical units where the units meet all the Guidelines requirements for the services provided as modified in this chapter.	
2.13-1.1.3 2.13-1.1.3.1 2.13-1.1.3.2	Mobile/Transportable Medical Unit Certification	Certification shall be provided in one of the following ways: (1) The manufacturer of the mobile/transportable medical unit shall provide the governing body with drawings of the unit that have been signed and sealed by an architect or professional engineer.	The UVM Medical Center contracts with mobile companies such as Alliance who are authorized to provide these mobile services with trailers that meet the listed requirements.

(2) A third-party nationally recognized testing laboratory (NRTL) shall provide the governing body with a field inspection report certifying the unit meets unit-specific requirements as described in this chapter or other certification processes acceptable to the AHJ.

The host facility and the mobile/transportable medical unit shall have on-site and available for review records of compliance with all relevant codes and standards required by this chapter for the following:

(1) Fire ratings of all structural materials and finishes

(2) All testing and calibration records, including those for:

(a) Air balancing

(b) Air filtration

(c) Sprinklers, where provided

(d) Biomedical equipment

		(e) Electrical wiring and equipment	
2.13-1.3 2.13-1.3.1 2.13-1.3.1.1 2.13-1.3.1.2 2.13-1.3.1.3 2.13-1.3.1.4 2.13-1.3.1.5 2.13-1.3.1.6 2.13-1.3.1.7 2.13-1.3.1.8 2.13-1.3.1.9	Site Unit Location	Access for the unit to arrive shall be provided. The mobile/transportable unit shall be parked on a solid, level surface, and safeguards shall be in place adequate to prevent movement of the unit while in use. A minimum separation of 25 feet (7.62 meters) shall be provided between any building outside air intake and any HVAC or generator exhaust from the unit. The location of the unit and routing of utilities shall avoid interference with appropriate access to and exiting from all occupied areas, including exterior means of egress to a public way. Use of an exit from the building as an access point to the mobile/transportable unit shall not be permitted unless the exit is designed specifically to serve both functions.	This new Essex Primary Care mobile addition has been designed to meet all of these listed requirements.

		The unit shall be located to avoid interference with fire lanes and direct access to the host facility by emergency personnel and vehicles during an emergency. The unit shall be sited to accommodate delivery services being provided to the host facility. Where the unit is located near vehicular drives or parking areas, impact barriers shall be provided. Tractors and/or cabs that have fuel tanks with a capacity of less than or equal to 100 gallons and that do not support the mobile/transportable unit while it is in use shall be detached and located more than 10 feet from the host facility. Tractors and/or cabs with fuel capacities greater than 100 gallons shall meet the requirements of NFPA 30: Flammable and Combustible Liquids Code.	
2.13-1.3.2	Parking	Sites shall provide parking for patients using the mobile/transportable unit.	The existing Essex Primary Care site has adequate parking to support this new service.

2.13-1.3.3 2.13-1.3.3.1 2.13-1.3.3.2 2.13-1.3.3.3	Unit Access from Site	Access to the unit shall be provided for wheelchairs, gurneys, stretchers, and patients with walkers. (1) Where an electric power lift is used to meet this requirement, it shall be connected either to the host facility's essential electrical system or to the unit's essential power supply system. (2) Stairs or ramps that are not part of the unit and that provide an entrance into the unit shall be provided in accordance with the adopted edition of the following: (a) Building code (b) NFPA 101: Life Safety Code® (c) Accessibility code for new facilities Protection from rain, sleet, wind, and snow during transport of patients from the host facility to the mobile/transportable unit shall be provided.	This new Essex Primary Care addition to support a mobile trailer has been designed to meet all of these listed requirements.

		(1) Where protection to and from the host facility is provided by a fabric-type canopy, the material shall comply with adopted fire codes. (2) Where provided, fabric (membrane) structures and supporting elements shall be designed to comply with local, state, and federal codes and regulations. (3) Where provided, a permanent, enclosed passageway from the host facility to the unit shall be in accordance with all building and fire codes and separated from the unit by a fire wall as required for a building. Access to the mobile/transportable unit from the host facility shall be marked and lighted.	
2.13-1.3.4 2.13-1.3.4.1 2.13-1.3.4.2	Site Utilities	The site or the mobile unit shall be provided with power, waste, water, telephone, and fire alarm connections to meet the requirements of the medical	All needed services have been included in the design to meet needed and stated specifications.

		services provided and of state and local codes. Utility connections, cables, and wires shall be protected by one of the following methods: (1) Concealment in conduits (2) Burial underground (3) Installation overhead	
2.13-1.3.5 2.13-1.3.5.1 2.13-1.3.5.2 2.13-1.3.5.3	Unit Pad	Sites shall have a level parking area or concrete pad. Construction of the unit pad shall: (1) Meet local, state, and seismic codes. (2) Conform to the manufacturer's requirements. (3) Be designed to support the loads of the unit. The unit shall be secured in place to prevent unintentional movement.	This new Essex Primary Care addition to support a mobile trailer has been designed to meet all of these listed requirements.
2.13-1.3.6 2.13-1.3.6.1	MRI Unit Site Requirements for Patient Safety	Because magnetic fields generated by magnetic resonance imaging	This new Essex Primary Care addition to support a mobile trailer

2.13-1.3.6.2	Magnetic field considerations. MRI suite safety	(MRI) units may extend beyond the MRI scanner room, a perimeter to restrict entry of all persons who have not been successfully screened for magnetic field contraindications shall be established around all areas in and around the MRI equipment with a static magnetic field of 5 gauss (0.5 millitesla) or greater. (1) Where mobile/transportable MRI units are used, siting designs shall allow the permanent facility and mobile/transportable unit, together, to comply with the following: (a) Section 2.1-3.5.5.1 (Configuration of the MRI suite) (b) American College of Radiology (ACR) four-zone access control (c) ACR screening protocols (2) For protection of patients, visitors, and health care workers, providers shall provide areas for the following:	has been designed to meet all of these listed requirements.

		(a) Interviews (b) Clinical and physical screening (c) Ferromagnetic detection screening (d) Access controls to Zone 3 and Zone 4 areas (3) Providers that are unable to comply with Section 2.1-3.5.5.1 (Configuration of the MRI suite) (e.g., due to physical separation of the mobile/transportable unit from the building) shall be permitted to submit an MRI risk assessment and risk mitigation plan prepared by a certified medical physicist, certified MR Medical Director, certified MR Safety Expert, or certified MR Safety Officer to the AHJ for a finding of equivalency.	
2.13-1.3.7 2.13-1.3.7.1 2.13-1.3.7.2 2.13-1.3.7.3 2.13-1.3.7.4	Radiation Protection	Radiation protection for ionizing radiation sources (e.g., x-ray and gamma ray sources) shall meet the requirements in the following: Section 2.1-3.5.1.3 (Radiation protection)	This new Essex Primary Care addition to support a mobile trailer has been designed to meet all of these listed requirements.

		National Council on Radiation Protection & Measurements (NCRP) report 147 (Structural Shielding Design for Medical X-Ray Imaging Facilities) NCRP report 116 (Limitation of Exposure to Ionizing Radiation) Applicable local and state requirements	
2.13-3 2.13-3.1 2.13-3.1.1 2.13-3.1.1.1	Patient Care and Diagnostic Areas Mobile/Transportable Units Space Requirements Class 1 and 2 units.	Where a Class 1 or Class 2 mobile/transportable medical unit cannot meet the Guidelines space requirements for the services provided in the unit, it shall meet the following space requirements inside the unit: (1) Class 1 units (a) Minimum room dimensions and clearances shall be sized and arranged to accommodate the required equipment and clearances in accordance with the manufacturer's technical specifications for maintenance, operation of the equipment, operation of the clinician, and patient safety.	The UVM Medical Center contracts with mobile companies such as Alliance who provide trailers that meet the listed requirements.

		(b) In the absence of such specifications from the manufacturer, the governing body of the host facility shall complete a safety risk assessment regarding the acuity of the patients being served and the procedures being provided to assure patient safety; see Section 1.2-4 (Safety Risk Assessment).	
2.13-3.1.2	Hand-Washing Stations	All mobile/transportable medical units shall be provided with a hand-washing station in accordance with Section 2.1-3.8.7 (Hand-Washing Station).	A hand-washing station is being provided in the new Essex Primary Care addition prep-room that is designed to support the mobile trailer.
2.13-3.2 2.13-3.2.1	Pre- and Post-Procedure Patient Care Holding Area	Class 1 and Class 2 mobile/transportable units shall provide a holding area either in the unit or readily accessible in the host facility.	This mobile unit will be classified as Class 1. A prep-room holding room is being provided in the new Essex Primary Care addition to support the mobile trailer.
2.13-3.8.11 2.13-3.8.11.1 2.13-3.8.11.2 2.13-3.8.12 2.13-3.8.12.1 2.13-3.8.12.2 2.13-3.8.12.3 2.13-3.8.13 2.13-3.8.13.1 2.13-3.8.13.2	Clean Workroom or Clean Supply Room Soiled Workroom Equipment and Supply Storage Supply storage Environmental Services Closet	A clean workroom or clean supply room that meets the requirements of Section 2.1-3.8.11 (Clean Workroom or Clean Supply Room) shall be provided. The clean workroom or clean supply room shall be permitted to be located either in the Class 1 or Class 2 unit or in the host facility	The existing Essex Primary Care site already has these services that will support the new Essex Primary Care addition and mobile trailer.

2.13-3.8.14 2.13-3.8.14.1 2.13-3.8.14.2		provided it is readily accessible to the unit. A soiled workroom that meets the requirements in Section 2.1-3.8.12.2 (Soiled workroom) shall be provided. The soiled workroom shall be permitted to be located either in the Class 1 or Class 2 unit or in the host facility provided it is readily accessible to the unit. This room shall be permitted to serve both the mobile/transportable unit and an adjacent unit in the host facility. Storage areas for equipment, clean gowns, and supplies shall be permitted to be located either in the Class 1 or Class 2 unit or in the host facility provided they are adjacent to the host facility's access point to the mobile/transportable unit. Storage for oxygen or other gases required for the services provided shall be included in space planning.	

		An environmental services closet shall be provided. The environmental services closet shall be permitted to be located either in the Class 1 or Class 2 unit or readily accessible in the host facility.	
2.13-3.10 2.13-3.10.1 2.13-3.10.1.1 2.13-3.10.1.2 2.13-3.10.2 2.13-3.10.3	Support Areas for Patients Patient Changing Area Patient Toilet Room Storage for Patients' Belongings	A patient changing area(s) designed for privacy of patients shall be provided. Changing areas shall be permitted to be located either in the Class 1 or Class 2 unit or in the host facility provided it is readily accessible to the unit. A patient toilet room shall be permitted to be located either in the Class 1 or Class 2 unit or in the host facility provided it is readily accessible to the unit. Space shall be provided in the Class 1 or Class 2 unit or in the host facility for storing patients' belongings in accordance with	This mobile unit will be classified as Class 1. The new Essex Primary Care addition is being designed with a patient changing / prep-room to support the new mobile trailer. The existing Essex Primary Care site has patient toilet services that will be utilized to support the new mobile trailer.

		Section 2.1-3.2.2.10 (4) (Storage for patients' belongings).	
2.13-6 2.13-6.1 2.13-6.2 2.13-6.2.1 2.13-6.2.1.1 2.13-6.2.1.2	Public and Administrative Areas General Public Areas Public Waiting Space(s)	See Section 2.1-6 (Public and Administrative Areas) for requirements as amended in this section. Where a mobile/transportable unit is placed at a host facility, the following shall be provided in the host facility: (1) Public waiting area or room (2) Provisions for drinking water (3) Provisions for telephone access (4) Public toilet room(s) readily accessible to the mobile/transportable medical unit For Class 1 and Class 2 mobile/transportable medical units, a waiting area for patients to be received and wait for services shall be provided either in the unit or in the host facility.	This mobile unit will be classified as Class 1. A public waiting space with drinking water, telephone access and public toilet services are already provided at the existing Essex Primary Care site and will be utilize to support the new Essex Primacy Care addition and mobile unit.

2.13-7 2.13-7.2 2.13-7.2.1 2.13-7.2.2 2.13-7.2.2.1 2.13-7.2.2.2	Design and Construction Requirements Architectural Details and Surfaces for Unit Construction Requirements Unit Stairs	The mobile/transportable medical unit shall meet the requirements in Section 2.1-7.2 (Architectural Details, Surfaces, and Furnishings) for the type of service provided. Stairs for mobile and transportable units shall comply with NFPA 101: Life Safety Code® for new facilities. Handrails shall be installed and constructed in accordance with NFPA 101, with the following exception: Provided the distance from grade to unit floor height is not greater than 4 feet 5 inches (1.35 meters), one intermediate handrail with a clear distance between rails of 19 inches (48.26 centimeters) maximum shall be permitted. (This exception is not applicable to existing units with a floor height of 5 feet 3 inches, or 1.60 meters, maximum.)	These listed features are all being provided in the new Essex Primary Care addition design.
2.13-8 2.13-8.2 2.13-8.2.1 2.13-8.2.1.1 2.13-8.2.1.2	Building Systems Heating, Ventilation, and Air-Conditioning (HVAC) Systems General Class 1 units	HVAC systems shall comply with the requirements in Section 2.1-8.2 (HVAC Systems) as modified in this section:	These features, as necessary, are being incorporated into the new Essex Primary Care addition HVAC design.

		HVAC equipment, ductwork, and related equipment shall be installed in accordance with NFPA 90A: Standard for the Installation of Air-Conditioning and Ventilating Systems. Mobile/transportable medical units that are limited to provision of non-invasive diagnostic and treatment services without use of anesthetics shall meet the following mechanical requirements: (1) Mechanical system design (a) A minimum indoor winter design capacity temperature of 75oF (24oC) shall be set for all patient areas. (b) Controls shall be provided for adjusting the temperature as appropriate for patient activities and comfort. (2) Ventilation and space-conditioning requirements. All occupied areas shall be ventilated by mechanical means.	

		(3) Where procedures or patients require positive or negative ventilation for infection prevention, the medical unit shall meet the ventilation requirements in Part 3 (ANSI/ASHRAE/ASHE 170: Ventilation of Health Care Facilities). (4) HVAC ductwork. Air-handling duct systems shall meet the requirements of NFPA 90A: Standard for the Installation of Air-Conditioning and Ventilating Systems.	
2.13-8.2.2 2.13-8.2.2.1 2.13-8.2.2.2	Air Intake	All outdoor air intakes and exhaust discharges shall meet the requirements of ASHRAE 170. Air intake for the mobile/transportable unit shall be located a minimum of 25 feet (7.62 meters) from all plumbing vents, exhaust fans, sources of combustion, idling vehicles, and any other sources of noxious fumes or odors. This distance shall be increased if prevailing wind patterns dictate this is appropriate.	The new mobile unit location has been designed to be away from these listed features.

2.13-8.3 2.13-8.3.1 2.13-8.3.1.2	Electrical Systems General Testing and documentation	(1) For all units, electrical installations, including fire alarm, nurse call, emergency power supply system (EPSS), information technology, and communication systems, shall be tested for compliance with applicable codes and standards. (2) A written record of performance tests on electrical systems and equipment shall show compliance with applicable codes and standards. (3) When a unit is relocated, retesting of the systems shall be completed and a written record of the retesting shall be provided showing current compliance with applicable codes and standards.	All of the new Essex Primary Care addition design features will be designed to meet the necessary applicable codes and stamped by a licensed State of Vermont Professional Engineer. This is reinforced with the State and Local permits that will be required during construction.
2.13-8.3.5 2.13-8.3.5.1	Equipment X-ray equipment	Fixed and mobile/transportable x-ray equipment installations shall conform to requirements of NFPA 70.	The UVM Medical Center contracts with mobile companies such as Alliance who provide trailers that meet the listed requirements.
2.13-8.3.6	Electrical Receptacles	Grounded-type hospital-grade receptacles shall be installed in accordance with Section 2.1-8.3.6 (Electrical Receptacles).	The new Essex Primary Care addition will specify / use grounded-type hospital-grade receptacles.

2.13-8.4 2.13-8.4.2 2.13-8.4.2.1 2.13-8.4.2.3 2.13-8.4.2.4 2.13-8.4.3	Plumbing Systems Plumbing and Other Piping Systems Freeze protection Water supply connection Waste connection Plumbing Vents	Plumbing and other piping systems shall be installed in accordance with applicable plumbing codes, unless specified herein. Water and sanitary lines to and from the unit shall have a means of freeze protection as required by the geographic location of the host facility. Backflow prevention shall be installed at the point of water connection on the unit. All waste lines shall be designed and constructed to discharge into the host facility sanitary sewage system or directly into the utility sewage system. Venting through the roof shall not be required for hand-washing stations in mobile/transportable units. Waste lines shall be permitted to be vented through the sidewalls or other locations that meet the plumbing code.	The existing Essex Primary Care site already has these plumbing features that will be utilized to support the new Essex Primary Care addition and mobile unit.
2.13-8.5 2.13-8.5.1 2.13-8.5.1.1	Communications Systems Emergency Communication System	A means for connecting the unit to the outpatient facility emergency	As part of the new Essex Primary Care addition design, fire alarm and nurse call systems, as

2.13-8.5.1.2		communication system shall be provided. Nurse call devices shall be provided in accordance with Table 2.1-3 (Locations for Nurse Call Devices in Outpatient Facilities).	necessary, will be tied into the existing Essex Primary Care host site.
2.13-8.5.2	Telephone Connection	A telephone shall be located inside the unit to communicate directly with the host facility's public branch exchange or a continually staffed location inside the host facility.	Telephones, connected back to the existing Essex Primary Care host site, will be provided in the new Essex Primary Care addition and mobile unit.
2.13-8.6 2.13-8.6.1 2.13-8.6.1.1 2.13-8.6.1.2 2.13-8.6.1.3	Safety and Security Systems Fire Alarm System Fire alarm connections Fire alarm notification Fire protection equipment	Fire alarm notification shall be provided from the unit to the host facility and from the host facility to the unit while the unit is on-site. Where a unit connects to a building, the connecting link and/or passageway shall be equipped with fire alarm systems and with smoke detection as required by NFPA 101. (1) The fire alarm system shall comply with minimum requirements for the fire alarm system of the building to which the	The new Essex Primary Care addition and mobile unit fire alarm systems will be connected back to the existing Essex Primary Care host site.

		unit is connected in accordance with NFPA 101. (2) Where a fire alarm system is provided, at least one manual pull station shall be provided in the unit or in the connecting passageway where the unit attaches to the building in accordance with NFPA 72: National Fire Alarm and Signaling Code. Fire alarm notification for all units shall be provided by one of the following methods: (1) An auto-dialer directly connected to the fire department or third-party respondent and connected to the unit's smoke detectors or manual pull station (2) Any unit fire alarm device activation connected to the host facility's building fire alarm system A manual fire extinguisher shall be provided in accordance with NFPA 10: Standard for Portable Fire Extinguishers.	

Exhibit 2
FGI Guidelines Chart
McClure 1

CON Standard 1.12 – Compliance with 2018 FGI Guidelines for Design and Construction of Hospitals
Sections 2.2-3.4 Imaging Services

FGI Guideline Section Number	FGI Guideline Section Title	FGI Requirement	How Addressed by the Proposed Project
2.2-3.4 2.2-3.4.1.1	Imaging Services Application	The requirements in this section shall not apply to imaging services provided in mobile/transportable medical units except as noted in Chapter 2.8, Specific Requirements for Mobile/Transportable Medical Units.	This section applies to our project.
2.2-3.4.1.2	Imaging room classification	To differentiate the design and construction requirements needed to achieve the environmental controls and other requirements that support the amount of intervention to be provided, imaging rooms shall be classified as described in Table 2.2-2 (Classification of Room Types for Imaging Services).	Our project is classified as a Class 1 imaging room.
2.2-3.4.1.3	Radiation protection	For imaging services that require radiation protection, a certified radiation physicist or equally qualified expert representing the owner or appropriate state agency shall specify the type, location, and	This project is an equipment replacement where all necessary radiation protection and a shielded control room exists. An in-house UVM Medical Center certified radiation physicist is part of the

amount of radiation protection to be installed in accordance with the final approved imaging services layout and equipment selections.

(1) Shielded control alcove or room. Each imaging room containing non-portable radiation-emitting imaging equipment or imaging equipment requiring shielding from external sources of interference shall include a fixed shielded control alcove or control room to minimize radiation exposure of technologists and others. Movable imaging equipment affixed to rails, tracks, or booms shall not be considered portable.

(a) Space requirements. The control alcove or room shall be, at minimum, sized and configured in compliance with the manufacturer's recommendations for installation, service, and maintenance.

(b) A control alcove or room shall be permitted to serve more than one imaging room, provided the design team and will need to re-certify the room.

manufacturer's recommendations for installation, service, and maintenance are accommodated for all rooms served.

(c) Shielded view window. The control alcove or room shall include a shielded view window designed to provide a full view of the examination/procedure table and the patient at all times, including a full view of the patient during imaging activities (e.g., when the table is tilted or the chest x-ray is in use). If a direct line of sight cannot be accommodated due to functional requirements, use of closed-circuit video monitoring shall be permitted.

(d) The control room shall be physically separated from the Class 2 or Class 3 imaging room with walls and a door.

(e) Where an imaging room requires positive (or negative) pressure, a door shall be provided between the control room and the imaging room.

		(f) Omission of the control alcove or room shall be permitted in electrophysiology labs if approved by a certified radiation physicist and provisions are made for individual staff radiation shielding. (2) Radiation protection requirements shall be incorporated into the specifications and the building plans.	
2.2-3.4.2 2.2-3.4.2.1	Imaging Rooms General	(1) The requirements in this section shall apply to imaging rooms for all modalities except where indicated. (2) Where an imaging room will be used for Class 1 and Class 2 procedures, the more stringent requirements for the higher class room shall be followed. (3) Where imaging procedures meeting Class 3 criteria are performed, a room(s) that meets the requirements for the applicable imaging suite and for an operating room (see Section 2.2-3.3.3, Operating Rooms) shall be provided. An operating room that meets the requirements in Section	Our project is classified as a Class 1 imaging room.

		2.2-3.3.4 (Hybrid Operating Room) shall be permitted to meet this requirement.	
2.2-3.4.2.2	Space requirements	Space shall be provided to accommodate the equipment and staff needed for planned imaging services. (1) Imaging rooms shall be sized and configured, at minimum, to comply with the manufacturer's recommendations for installation, service, and maintenance. (2) Imaging rooms shall be sized to provide the following minimum clearances: (a) 4 feet (122 centimeters) on all circulating sides of the patient table/bed/couch, gantry, or assembly (b) Other clearances in accordance with clinical needs (e.g., medical gas service, anesthesia cart, clinical staff)	UVM Medical Center has worked with the equipment replacement vendor, Philips Healthcare, to ensure that all equipment manufacturer's recommendations are met. The final clearances will be very similar to existing and have been determined to meet clinical needs.
2.2-3.4.2.3	Hand-washing station or hand scrub facilities	Hand-washing stations and hand scrub facilities shall comply with the requirements in Section 2.1-	Our project is classified as a Class 1 imaging room. A hand-washing

		2.8.7 (Hand-Washing Station) and Section 2.1-2.8.6 (Hand Scrub Facilities). (1) A hand-washing station shall be provided in Class 1 imaging rooms unless specified otherwise for a specific imaging modality. (2) A hand-washing station or hand scrub facilities shall be provided for Class 2 imaging rooms. (a) Where a hand-washing station is provided, it shall be directly accessible to the Class 2 imaging room. (b) Where a hand scrub facilities are provided, a hand scrub position shall be directly outside the entrance to the Class 2 imaging room. (3) Hand scrub facilities shall be provided directly outside the entrance to Class 3 imaging rooms.	station already exists within the room and will be maintained.
2.2-3.4.2.4	Other design elements	The following shall apply to all imaging rooms, with noted exceptions:	Our project is classified as a Class 1 imaging room. All of the listed

(1) Architectural details

(a) Floor

(i) Class 2 and Class 3 imaging rooms shall meet the flooring requirements in Section 2.1-7.2.3.1 (7) (Floor and wall base assemblies).

(ii) Floor finishes shall be selected to conform to imaging equipment technical requirements (e.g., electrostatic dissipation), rolling resistance to carts and tables, and service limitations (e.g., no powered floor cleaners in an MRI scanner room).

(b) Ceiling

(i) Where only general diagnostic procedures are performed, use of a lay-in ceiling shall be permitted.

(ii) Class 2 imaging rooms shall be provided with ceiling assemblies that meet the requirements in Section 2.1-7.2.3.3 (2) (Ceilings—Semi-restricted areas).

requirements already exist within the space and will be maintained.

(iii) Class 3 imaging rooms shall be provided with ceiling assemblies that meet the requirements in Section 2.1-7.2.3.3 (3) (Ceilings—Restricted areas).

(c) Door openings. Imaging rooms shall have entrance door openings that comply with Section 2.1-7.2.2.3 (Doors and door hardware).

(d) Structural support. The floor and, if applicable, ceiling structures in imaging rooms shall be designed to support the weight of the imaging equipment as well as other fixed ancillary equipment (e.g., lights, service columns) and movable ancillary equipment.

(e) Protection from vibration and other disturbances. Imaging room(s) shall be protected from environmental vibrations and other disturbances in accordance with the imaging equipment manufacturer's technical specifications.

(2) Building system components

		(a) Electrical receptacles. For requirements, see Table 2.1-1 (Electrical Receptacles for Patient Care Areas in Hospitals). (b) Call systems. For requirements, see Table 2.1-2 (Locations for Nurse Call Devices in Hospitals). (c) Medical gas systems. For requirements, see Table 2.1-3 (Station Outlets for Oxygen, Vacuum, Medical Air, and Instrument Air Systems in Hospitals).	
2.2-3.4.2.5	System component room	Where a system component room is provided, it shall meet the requirements in this section. (1) Location (a) For Class 2 and Class 3 imaging rooms, the system component room shall be accessed only from a semi-restricted or unrestricted space outside the imaging room. (b) A system component room shall be permitted to be shared among multiple rooms provided the	Our project is classified as a Class 1 imaging room. A system component room exists yet will be enlarged as part of this project. It has been designed to meet all equipment manufacturer's (Philips Healthcare) recommendations.

		equipment manufacturer(s) permit such sharing. (2) Space requirements. The system component room shall be sized to accommodate the following as indicated by the imaging equipment manufacturer(s), including the clear floor area: (a) Transformers (b) Power distribution equipment (c) Power conditioning/UPS equipment (d) Computers (e) Associated electronics and electrical gear	
2.2-3.4.2.6	Multiple-modality devices	Where two or more individual imaging or therapy modalities are integrated into one imaging device (e.g., PET/CT, SPECT/CT or PET/MRI), the minimum design requirements for that room shall include the design criteria for each individual contributing modality.	This room has been designed to meet all Philips Healthcare equipment manufacturer's recommendations.

2.2-3.4.3 2.2-3.4.3.1	Computed Tomography (CT) Facilities CT scanner room	(1) The CT scanner room shall meet the requirements in sections 2.2-3.4.1 (Imaging Services—General) and 2.2-3.4.2 (Imaging Rooms) as amended in this section. (2) A hand-washing station that meets the requirements in 2.2-3.4.2.3 (Hand-washing station or hand scrub facilities) shall be provided in the CT scanner room.	As listed above. This room meets these requirements.
2.2-3.4.3.2	Control room or alcove	A control room or alcove that meets the requirements in Section 2.2-3.4.1.3 (1) (Shielded control alcove or room) shall be provided.	As listed above. This room meets these requirements.
2.2-3.4.3.3	System component room.	Where provided, a system component room shall meet the requirements in Section 2.2-3.4.2.5 (System component room).	As listed above. This room meets these requirements.
2.2-3.4.9 2.2-3.4.9.1 2.2-3.4.9.2 2.2-3.4.9.4	Support Areas for Imaging Services Staff Staff lounge Staff toilet room Staff changing area.	(1) A staff lounge shall be provided that is readily accessible to the imaging suite. (2) Provisions shall be made for securing staff belongings, but location of these provisions outside the staff lounge shall be permitted.	Our project is classified as a Class 1 imaging room. A larger staff lounge is being configured as part of this project. All other staff services are provided directly within the vicinity of this space on McClure Level 1.

		(1) A staff toilet room(s) shall be directly accessible to the staff lounge. (2) In suites of three or more imaging rooms, staff toilets shall be immediately accessible to the imaging suite For Class 2 and 3 imaging rooms, a staff changing area that meets the requirements of Section 2.2-3.3.9.4 (Staff changing area and toilet facilities) shall be provided. This space shall be permitted to be shared with surgery services.	
2.2-3.4.10 2.2-3.4.10.1 2.2-3.4.10.2 2.2-3.4.10.3	Support Areas for Patients Patient waiting room or area Patient toilet rooms Patient changing rooms	(1) Waiting areas shall be screened and separated from unrelated traffic and under staff control. (2) Seating capacity shall be provided to accommodate the maximum expected patient volume. (3) If the suite is routinely used for outpatients and inpatients at the same time, outpatient waiting and inpatient holding areas shall be separated and screened to provide	This equipment replacement project is located on McClure Level 1 where all of these patient services already exist.

		visual and acoustic privacy between them. (4) Provision of waiting areas for individual modalities, or sharing of sub-waiting areas among similar modalities, shall be permitted where patient waiting in areas adjacent to the imaging room(s) is desired. (5) If so determined by an ICRA, a diagnostic imaging waiting room or area shall have special measures to reduce the risk of airborne infection transmission. These measures shall include enhanced general ventilation and air disinfection techniques similar to the requirements for airborne infection isolation rooms provided in Part 3 (ANSI/ASHRAE/ASHE 170: Ventilation of Health Care Facilities). (1) Patient toilet rooms with hand-washing stations shall be immediately accessible to waiting rooms or areas and, where provided, to patient changing rooms.	

		(2) Toilet rooms for imaging rooms (a) Where procedures performed require patient access to toilets, a patient toilet room shall be directly accessible from the imaging room. (b) A patient toilet room shall be permitted to serve more than one imaging room. (c) Shared toilet rooms shall have interlocking door access hardware. (3) Toilet rooms for nuclear imaging patients (a) Toilet rooms reserved for nuclear imaging patients shall be immediately accessible to waiting rooms or areas and nuclear imaging rooms. (b) For dosed nuclear imaging patients, dedicated “hot” toilets, restricted from the use of all others for a duration from last use set by a medical physicist, shall be provided in quantities and locations	

		to meet the needs of nuclear imaging patients. (1) Where changing rooms are required, they shall be located adjacent to the imaging rooms. (2) Each room shall include a seat or bench and mirror. (3) Provisions for hanging patients' clothing and securing valuables shall be provided either in the patient changing room or in shared secured storage.	

Exhibit 3
Site/Floor Plan McClure Level 1

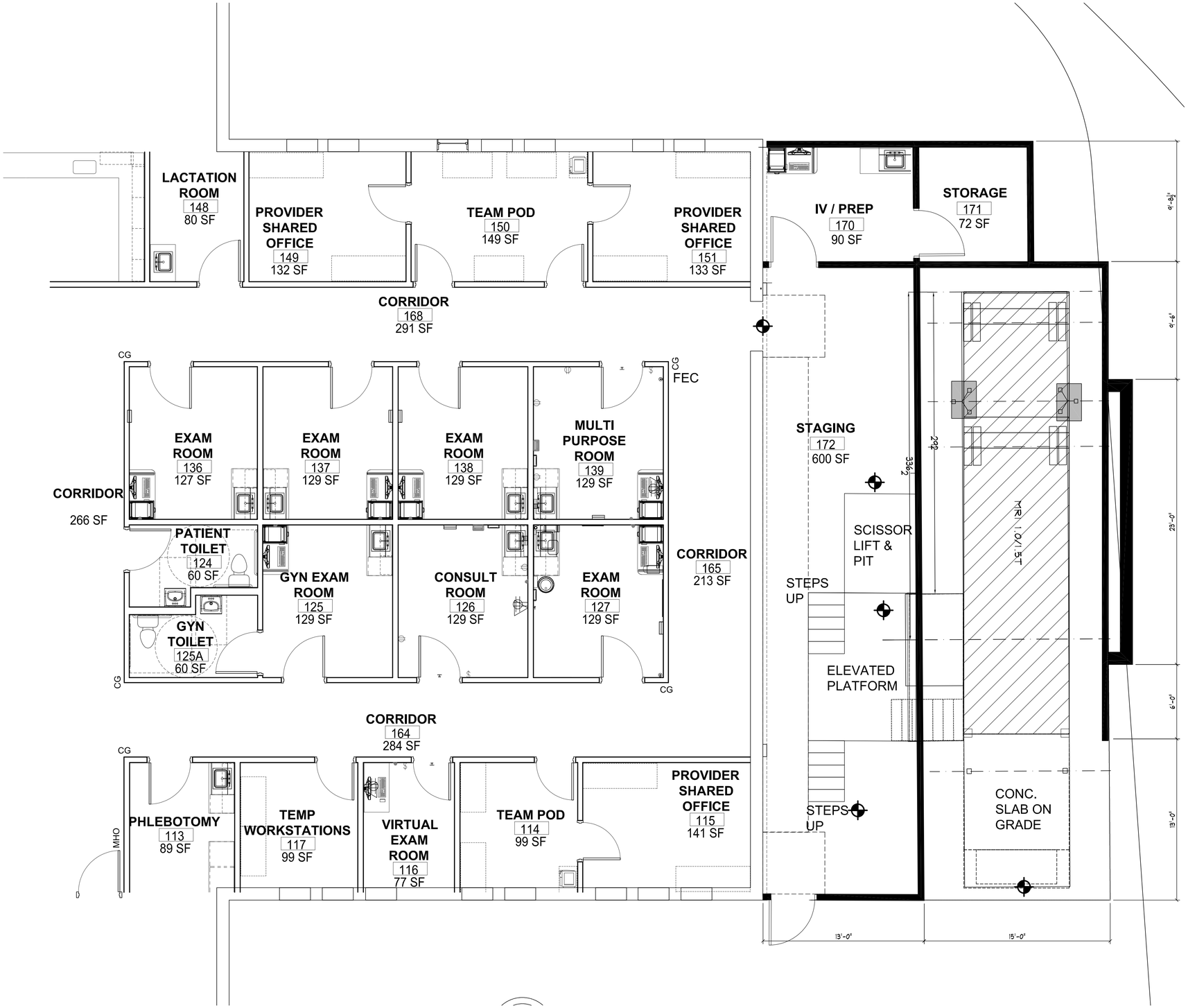

1 FLOOR PLAN - NEW WORK
SCALE - 1/4" = 1'-0"

0 2' 4' 8'
SCALE: 1/4" = 1'-0"

IN ACCEPTING AND UTILIZING THESE DRAWINGS, REPORTS OR DATA, RECIPIENT ACKNOWLEDGES THAT THIS DOCUMENT WAS CREATED BASED ON PROVIDED INFORMATION, FIELD OBSERVATIONS AND MEASUREMENTS. INFORMATION IS FOR BASE PLANNING PURPOSES ONLY AND ALL INFORMATION SHALL BE VERIFIED PRIOR TO THE COMMENCEMENT OF ANY RENOVATION/MODIFICATIONS, ETC.

Rev # - REVISION

PROJECT NAME AND ADDRESS

UVMMC
REMOTE MOBILE MODALITY UNITS
ESSEX, VT

2000 - CELEBRATING 20 YEARS - 2020

Joseph Architects
25 Crossroad
Waterbury, Vermont 05676
Tel. 802-244-5220
Fax 802-806-1010
www.JosephArchitects.com

DRAWING NAME

DESIGN DEVELOPMENT
FLOOR PLAN

J.G. DRAWN BY	2022/02/16 DATE
21-120 PROJECT NUMBER	SHEET

DD-01

PHILIPS

www.healthcare.philips.com

Revision History

Note for Architects and/or Contractors: If revisions are listed, these drawings must be thoroughly reviewed so that all changes can be incorporated into your project

Rev.	Date	Revision Descriptions	By

Table of Contents

Section A - Equipment Plan

General Notes ---------- AN
Equipment Legend ---------- AL
Site Layout ---------- A1
Equipment Layout ---------- A2

PHILIPS

Project
Spectral CT 7500

UVM
Burlington, VT
Room: CT2

Philips Contacts
Project Manager: Andrew Marshall
Contact Number: (802) 923-6500
Email: andrew.marshall@philips.com

Drawn By: Brandon Soundara

Project Details
Drawing Number
N-EAS220052
Date Drawn: 2/11/2022
Quote: 1-2NGC2G6 Rev. 2
Order: 6600564817.010000

C1

© Koninklijke Philips Electronics N.V. 2019. All rights reserved. Reproduction in whole or in part is prohibited without prior written consent of the copyright holder.

THE INFORMATION IN THIS PACKAGE IS PROVIDED AS A CUSTOMER CONVENIENCE, AND IS NOT TO BE CONSTRUED AS ARCHITECTURAL DRAWINGS OR CONSTRUCTION DOCUMENTS. Philips assumes no liability nor offers any warranty for the fitness or adequacy of the premises or the utilities available at the premises in which the equipment is to be installed, used, or stored.

General Specifications

1. **Responsibility**
   The customer shall be solely responsible, at their expense for preparation of site, including any required structural alterations. The site preparation shall be in accordance with plans and specifications provided by Philips. Compliance with all safety, electrical, and building codes relevant to the equipment and its installation is the customer's responsibility. Sufficiency of such plans and specifications, specifically including, but not limited to the accuracy of the dimensions described therein, shall be the sole responsibility of the customer. The customer shall advise Philips of conditions at or near the site which could adversely affect the carrying out of the installation work and shall ensure that such conditions are corrected and that the site is fully prepared and available to Philips before the installation work is due to begin. The customer shall provide all necessary plumbing and/or carpentry work as well as electrical raceways and/or conduit wiring required to attach and install products ready for use.

2. **Permits**
   Customer shall obtain all permits and licenses required by federal, state/provincial or local authorities in connection with the construction, installation and operation of the products and shall bear any expense in obtaining same or in complying with any related rules, regulations, ordinances and statutes.

3. **Radiation Protection**
   The customer or their contractor, at their own expense, shall obtain the service of a licensed radiation physicist to specify radiation protection

4. **Asbestos and Other Toxic Substances**
   Philips assumes no hazardous waste (i.e., pcb's in existing transformers) exists at the site. If any hazardous materials are found, it shall be the sole responsibility of the customer to properly remove and dispose of these materials at their expense. Any delays caused in the project for this special handling shall result in Philips' time period for completion being extended by like period of time. Philips assumes that no asbestos material is involved in this project in any ceilings, walls or floors. If any asbestos material is found anywhere on the site, it shall be the customer's sole responsibility to properly remove and/or make safe this condition, at the customer's sole expense.

5. **Labor**
   In the event local labor conditions make it impossible or undesirable to use Philips' regular employees for such installation and connection, such work shall be performed by laborers supplied by the customer, or by an independent contractor chosen by the customer at the customer's expense, and in such case, Philips agrees to furnish adequate engineering supervision for proper completion of the installation.

6. **Schedule**
   The general contractor should provide Philips with a schedule of work to assist in the coordination of delivery of Philips supplied products and primary equipment, which are to be installed by the contractor.

7. **Extended Installation or Turnkey Work by Philips**
   Any room preparation requirements for Philips equipment indicated on these drawings is the responsibility of the customer. If an extended installation or turnkey contract exists between Philips and the customer for room preparation, then additional work required for the equipment will not be represented on these drawings. Some of the responsibilities of the customer as depicted in these drawings may be assumed by Philips. In the event of a conflict between the work described in the turnkey contract work scope and these drawings, the turnkey contract work scope shall govern.

(16.0)

General Considerations

1. Wheels on control room equipment are provided for service only. Philips equipment located in the control room should not be repositioned post-installation and should be handled with care.
2. Philips CT systems come with a calibration phantom, service tools, and manuals. These should be stored in or near the exam room if possible, for ease of use and access by the Philips service engineer and customer physicist. Consult with Philips service.

(16.0)

Minimum Site Preparation Requirements

A smooth efficient installation is vital to Philips and its customers. Understanding what the minimum site preparation requirements are will help achieve this goal. The following list clearly defines the requirements which must be fulfilled by the customer before the installation can begin.

1. Walls to be painted or covered, baseboards installed, floors to be tiled and/or covered, ceiling shall have grid tiles, architectural features (such as casework or bulkheads) installed and finished, lighting fixtures installed and operational, light levels for servicing of equipment to be a minimum of 500 lux, and the area in and around the CT Suite must be dust free.

2. Doors and windows, especially radiation protection barriers, installed and finished with locksets operational.

3. All electrical convenience outlets, conduit, raceway and junction boxes installed and operational.

4. Incoming mains power (including any power devices purchased through Philips) operational and available at the CT Gantry.

5. 120 V convenience outlets operational.

6. All support structures correctly installed. All channels, pipes, beams and/or other supporting devices should be level, parallel, and free of lateral or longitudinal movements.

7. Door switch (if required) and door light (if required) wires must be pulled and available for connection.

8. All HVAC (heating, ventilating and air conditioning) installed and operational per specifications listed under "HVAC Requirements for General Equipment Locations" on this page.

9. All plumbing installed and operational (if required).

10. All doors and passage sizes are adequate for moving of equipment from exterior to specified room. Required door width is 48" (1220mm) for 96" (2438mm) adjacent corridor and 72" (1830mm) for 72" (1830mm) adjacent corridor. Recommended minimum door heights shall be 80" (2032mm) clear opening.

11. The floor levelness under the CT Gantry and the Patient Table meet Philips' specifications. If the customer cannot meet these specifications, then contact the local Philips Service Representative to discuss possible solutions.

12. The structural floor support of the CT Suite and the delivery path is adequate for the weight of the equipment and has been validated by the customer prior to delivery of the system.

13. Internet access is required to be available in the control area prior to delivery of the system for Web FSE Access.

14. Remote Service Diagnostics - Medical imaging equipment to be installed by Philips is equipped with a service diagnostic feature which allows for remote and on site service diagnostics. To establish this feature, an RJ45 type ethernet 1000 Mbit network connector must be installed as shown on plan. Access to customer's network via their remote access server is needed for Remote Service Network (RSN) connectivity. All costs with this feature are the responsibility of the customer.

Note
Once Philips has moved equipment into the CT Suite and started the installation, contractors shall schedule their work around the Philips installation team on site. It is suggested that a telephone be provided in the suite to receive telephone calls. This will alleviate the need for facility staff to answer calls for Philips personnel.

(16.0)

Electrical Requirements
Configuration

Supply Configuration:	3 phase, 3 wire power, Earth 1 & 2
Nominal Line Voltage:	480/415/400/380 VAC ± 10%, 50/60 Hz, ±3 Hz
Branch Power Requirement:	225kVA nominal - 175kVA maximum momentary power

Refer to sheet ED1 of final drawing package for complete electrical requirements

(16.0)

HVAC Requirement for General Equipment Locations

Operating temperature range within the CT Exam Room is 64° F (18° C) to 75° F (24° C) [ideal stable room temperature setting: 72° F (22° C)] at 35% to 70% relative humidity (non-condensing). Temperature variations within this range (18-24° C; 64-75° F) must not exceed 7.5° F (4.1° C) during operations. Temperature gradient must not exceed 7.5° F (4.1° C) per hour. Room air-conditioning supply vents should not discharge directly over patient table and treatment area, which may cause discomfort to the patient.

Operating temperature range within the technical/equipment room is 59° F (15° C) to 82.4° F (28° C). Relative humidity at 20% to 80% (non-condensing). Temperature variations within this range (15-28° C; 59-84° F) must not exceed 9° F (5° C) during operations. Temperature gradient must not exceed 9° F (5° C) per hour.

Operating temperature range throughout rest of CT Suite is 59° F (15° C) to 75° F (24° C) [ideal stable room temperature setting: 72° F (22° C)] at 35% to 70% relative humidity (non-condensing). Operating temperature change per hour throughout the CT suite is 5° F (3° C).

The above conditions must be maintained at all times including overnight, weekends and holidays. Heat output in one area of CT suite must not affect temperature and humidity in other areas. It is strongly recommended that any definable areas within the suite, i.e. equipment closets, control areas, etc. (if applicable), be individually environmentally controlled as required to meet the ambient ranges specified.

See Equipment Detail sheets of final drawing package for individual equipment ratings which may or may not operate simultaneously.

(20.0)

Air-Cooling Requirements -- COM Cabinet

1. Placement of COM should accomodate COM heat levels.
   1.1. 4" required between back of COM and wall.
   1.2. Avoid running raceway behind back of COM. If raceway passes behind COM, 4" required between back of COM and surface of raceway.
2. If COM cabinet is placed in a corner or under a desk, there must be airflow around the cabinet and a method for the hot exhaust air from the computers (vented in rear) to escape.
   2.1. Provide 5 X 46 cm (2" x 18") or equivalent area opening on counter top near wall .

(20.0)

Vibration Specifications

	Operation Gantry & Couch	Operation Rest of System
Vibration Frequency Range in Hz	1-150	1-150
Vibration/Shock Amplitude in mm (peak to peak)	0.15	0.15
Vibration Acceleration in grams	*	0-2
Shock Acceleration in g	0-2	0-2
Steady State Vibration	*	N/A
Altitude under Operation	78 kPa [2,100m]	70kPa [3,000m]
* See chart on MP2 sheet of final drawing package.		

(20.0)

Magnetic Field Limitations

To avoid image quality issues the magnetic field may not exceed 2 gauss (0.2mT) at any point on the CT System. The computer monitors have a gauss limit of 5 gauss (0.5mT).

(20.0)

PHILIPS

Project
Spectral CT 7500
UVM
Burlington, VT
Room: CT2

Philips Contacts
Project Manager: Andrew Marshall
Contact Number: (802) 923-6500
Email: andrew.marshall@philips.com
Drawn By: Brandon Soundara

Project Details
Drawing Number
N-EAS220052
Date Drawn: 2/11/2022
Quote: 1-2NGC2G6 Rev. 2
Order: 6600564817.010000

AN

© Koninklijke Philips Electronics N.V. 2019. All rights reserved. Reproduction in whole or in part is prohibited without prior written consent of the copyright holder.

THE INFORMATION IN THIS PACKAGE IS PROVIDED AS A CUSTOMER CONVENIENCE, AND IS NOT TO BE CONSTRUED AS ARCHITECTURAL DRAWINGS OR CONSTRUCTION DOCUMENTS. Philips assumes no liability nor offers any warranty for the fitness or adequacy of the premises or the utilities available at the premises in which the equipment is to be installed, used, or stored.

Equipment Legend

A Furnished and installed by Philips
B Furnished by customer/contractor and installed by customer/contractor
C Installed by customer/contractor
D Furnished by Philips and installed by contractor
E Existing
F Future
G Optional

	Equipment Designation	Description	Detail Sheet: Weight (lbs)	Detail Sheet: Heat Load (BTU/hr)
A	WS	CT 7500 Spectral CT Scanner Gantry	5600	31014
A	WT	High Performance Patient Table	1370	0
A	OC	Operator's Console (dual monitor)	40	321
A	COM	Host Computer Cabinet	185	2339
A	HSR	HyperSight Spectral Rack	806	13073
A	PDU	Power Distribution Unit	1264	8086
A	AIR	Air Compressor		6500
A	SV	Spectral CT Viewer - Server	43	1849
B	CW	Customer Workstation (to connect to SV)	90	1000

PHILIPS

Project
Spectral CT 7500

UVM
Burlington, VT
Room: CT2

Philips Contacts
Project Manager: Andrew Marshall
Contact Number: (802) 923-6500
Email: andrew.marshall@philips.com
Drawn By: Brandon Soundara

Project Details
Drawing Number
N-EAS220052
Date Drawn: 2/11/2022
Quote: 1-2NGC2G6 Rev. 2
Order: 6600564817.010000

AL

THE INFORMATION IN THIS PACKAGE IS PROVIDED AS A CUSTOMER CONVENIENCE, AND IS NOT TO BE CONSTRUED AS ARCHITECTURAL DRAWINGS OR CONSTRUCTION DOCUMENTS. Philips assumes no liability nor offers any warranty for the fitness or adequacy of the premises or the utilities available at the premises in which the equipment is to be installed, used, or stored.

© Koninklijke Philips Electronics N.V. 2019. All rights reserved. Reproduction in whole or in part is prohibited without prior written consent of the copyright holder.

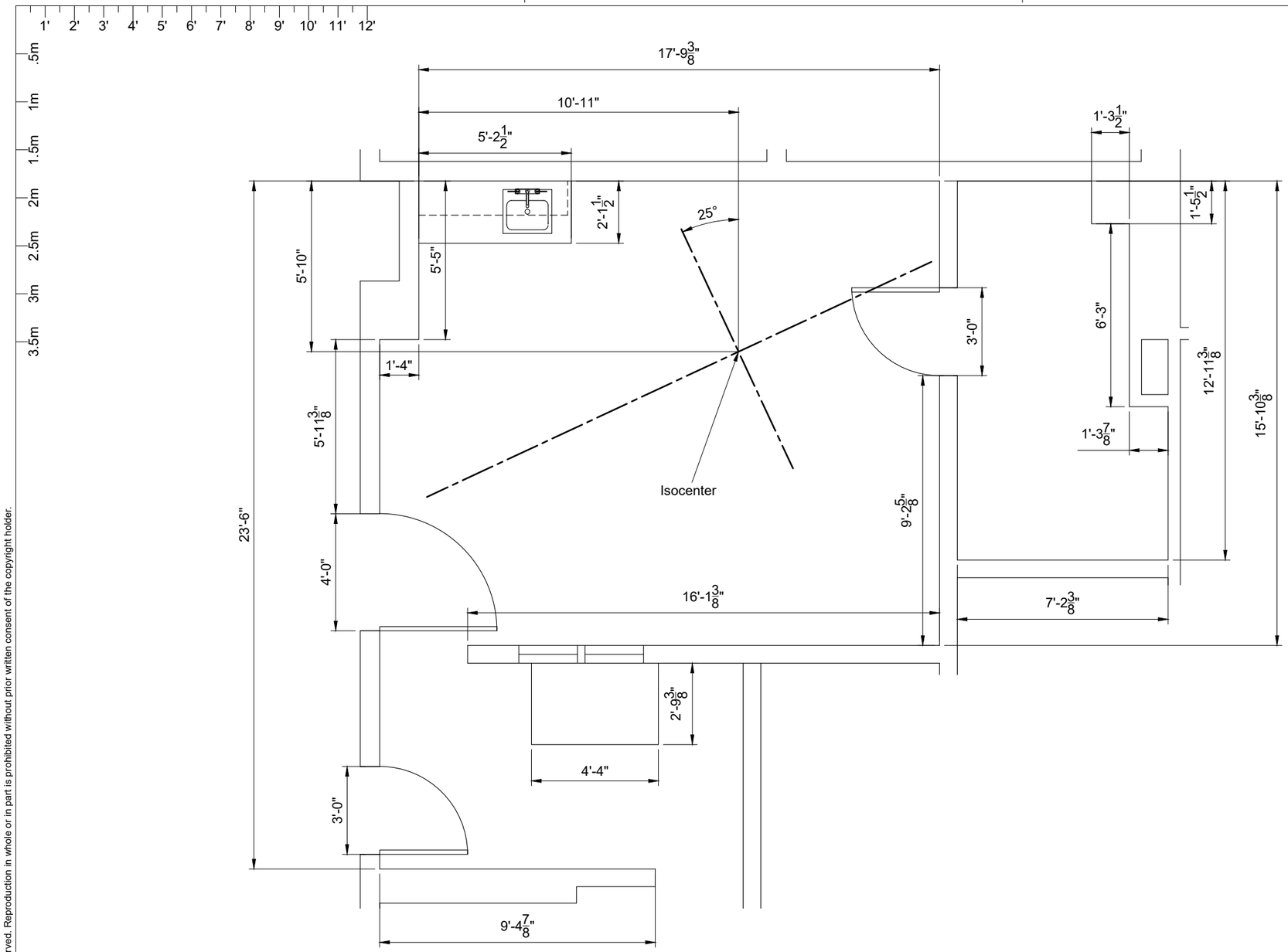

Legend

- Walls
- Soffit
- Existing (to be removed)
- Beams or other building construction elements

Site Layout

1/4" = 1'-0"

Recommended Ceiling Height: 9' - 0" (2743mm)
Minimum Ceiling Height: 8' - 6" (2438mm)

Project
Spectral CT 7500

UVM
Burlington, VT
Room: CT2

Philips Contacts
Project Manager: Andrew Marshall
Contact Number: (802) 923-6500
Email: andrew.marshall@philips.com

Drawn By: Brandon Soundara

Project Details
Drawing Number
N-EAS220052
Date Drawn: 2/11/2022
Quote: 1-2NGC2G6 Rev. 2
Order: 6600564817.010000

A1

4.13.2021

© Koninklijke Philips Electronics N.V. 2019. All rights reserved. Reproduction in whole or in part is prohibited without prior written consent of the copyright holder.

THIS SHEET IS PART OF THE DOCUMENT SET LISTED ON SHEET C1 AND SHOULD NOT BE SEPARATED.

THE INFORMATION IN THIS PACKAGE IS PROVIDED AS A CUSTOMER CONVENIENCE, AND IS NOT TO BE CONSTRUED AS ARCHITECTURAL DRAWINGS OR CONSTRUCTION DOCUMENTS. Philips assumes no liability nor offers any warranty for the fitness or adequacy of the premises or the utilities available at the premises in which the equipment is to be installed, used, or stored.

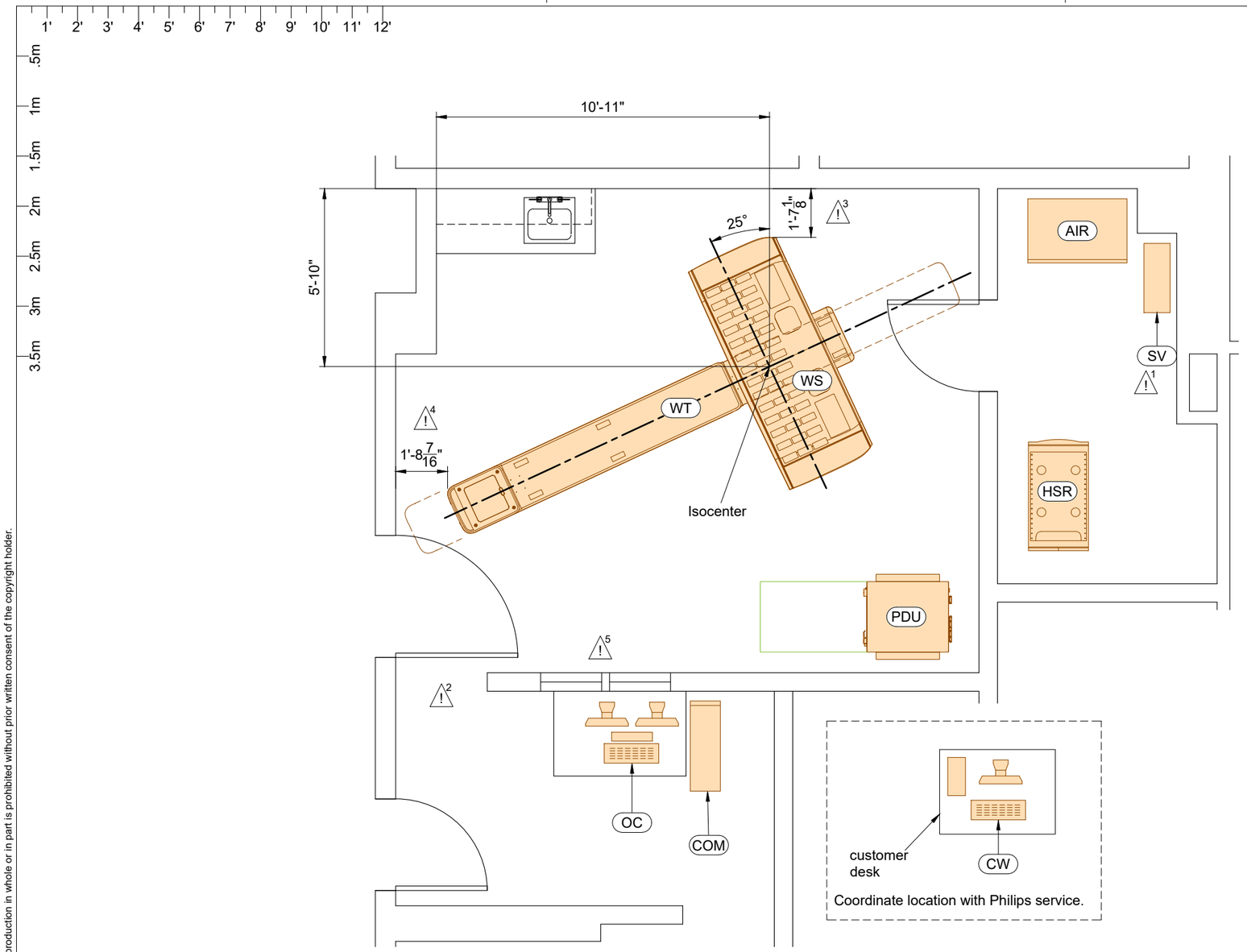

Equipment Layout

1/4" = 1'-0"

Recommended Ceiling Height: 9' - 0" (2743mm)
Minimum Ceiling Height: 8' - 6" (2438mm)

General Notes

* Any counters, keyboard trays and cabinetry shown to be supplied and installed by contractor.
* Field to verify all existing Philips and/or third party equipment will not affect the functionality of the system and its components.

Site Planning Issues and Considerations

1. "SV" can be remotely located in an IT rack in the hospital's computer room.
2. Possible exposure to scatter radiation from system. Verify with customer's physicist of record.
3. Limited service access. Recommended minimum clearance is 2'-8". Verify with local Philips service.
4. Access around foot-end of table is limited and may be in violation of ADA. Recommended minimum clearance is 3'-0". Verify with customer requirements and local code.
5. View of patient in bore of scanner may be limited. Recommend a patient observation system.

* Location of WS may violate ADA. Verify with architect of record.
* Staff access to sink and casework may be difficult due to system placement.

PHILIPS

Project
Spectral CT 7500
UVM
Burlington, VT
Room: CT2

Philips Contacts
Project Manager: Andrew Marshall
Contact Number: (802) 923-6500
Email: andrew.marshall@philips.com
Drawn By: Brandon Soundara

Project Details
Drawing Number
N-EAS220052
Date Drawn: 2/11/2022
Quote: 1-2NGC2G6 Rev. 2
Order: 6600564817.010000

A2

© Koninklijke Philips Electronics N.V. 2019. All rights reserved. Reproduction in whole or in part is prohibited without prior written consent of the copyright holder.

THE INFORMATION IN THIS PACKAGE IS PROVIDED AS A CUSTOMER CONVENIENCE, AND IS NOT TO BE CONSTRUED AS ARCHITECTURAL DRAWINGS OR CONSTRUCTION DOCUMENTS. Philips assumes no liability nor offers any warranty for the fitness or adequacy of the premises or the utilities available at the premises in which the equipment is to be installed, used, or stored.

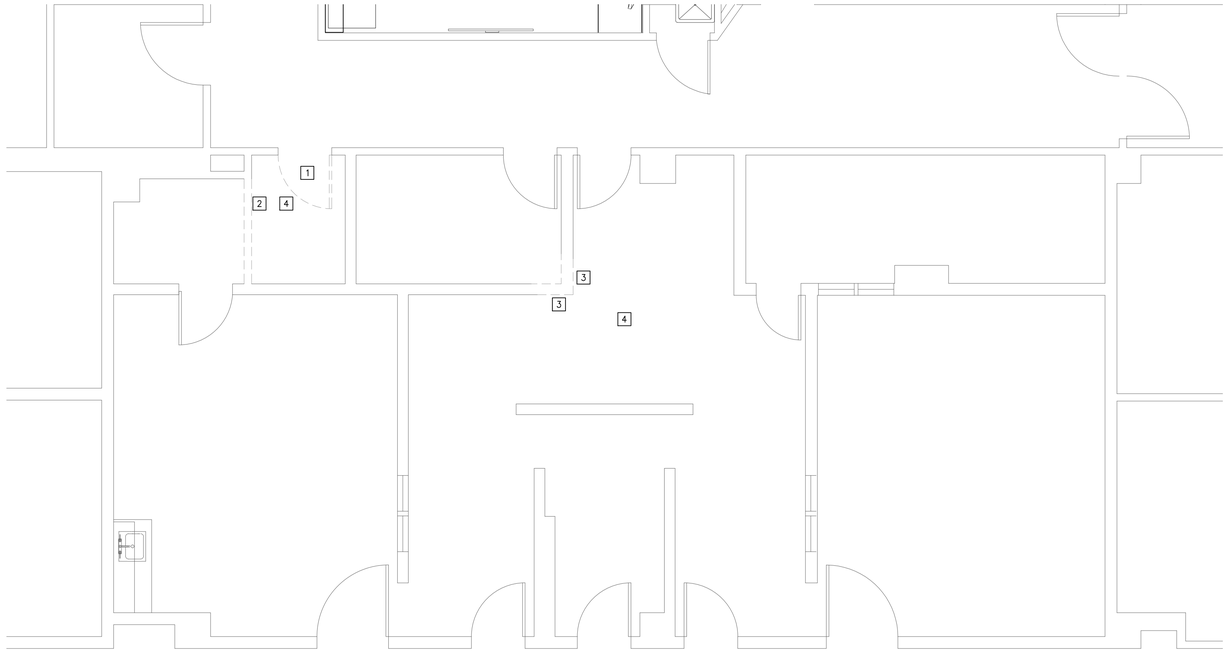

1 ARCHITECTURAL DEMOLITION
SCALE: 1/4" = 1'-0"

ARCH. DEMOLITION GENERAL NOTES:

1. PATCH, REPAIR, AND PAINT (IF APPLICABLE) ALL SURFACES (WALLS, FLOORS, CEILINGS, ETC.) AFFECTED BY REMOVAL OF ANY ITEMS (CASEWORK, WALLS, CEILINGS, PLUMBING FIXTURES, ETC.) PATCH, REPAIR AND PAINT TO MATCH ADJACENT NON-DISTURBED SURFACES.
2. WHEN REMOVING ALL OR PORTIONS OF EXISTING PARTITIONS RE-SUPPORT AND/OR SECURE FIXTURES, CONDUITS, DUCTWORK AND THE LIKE IN A MANNER DEEMED APPROPRIATE BY THE AUTHORITY HAVING JURISDICTION.

ARCH. DEMOLITION KEYED NOTES: #

1. REMOVE EXISTING DOOR AND FRAME.
2. REMOVE EXISTING WALL.
3. REMOVE EXISTING WALL SECTION.
4. REMOVE EXISTING FLOORING.

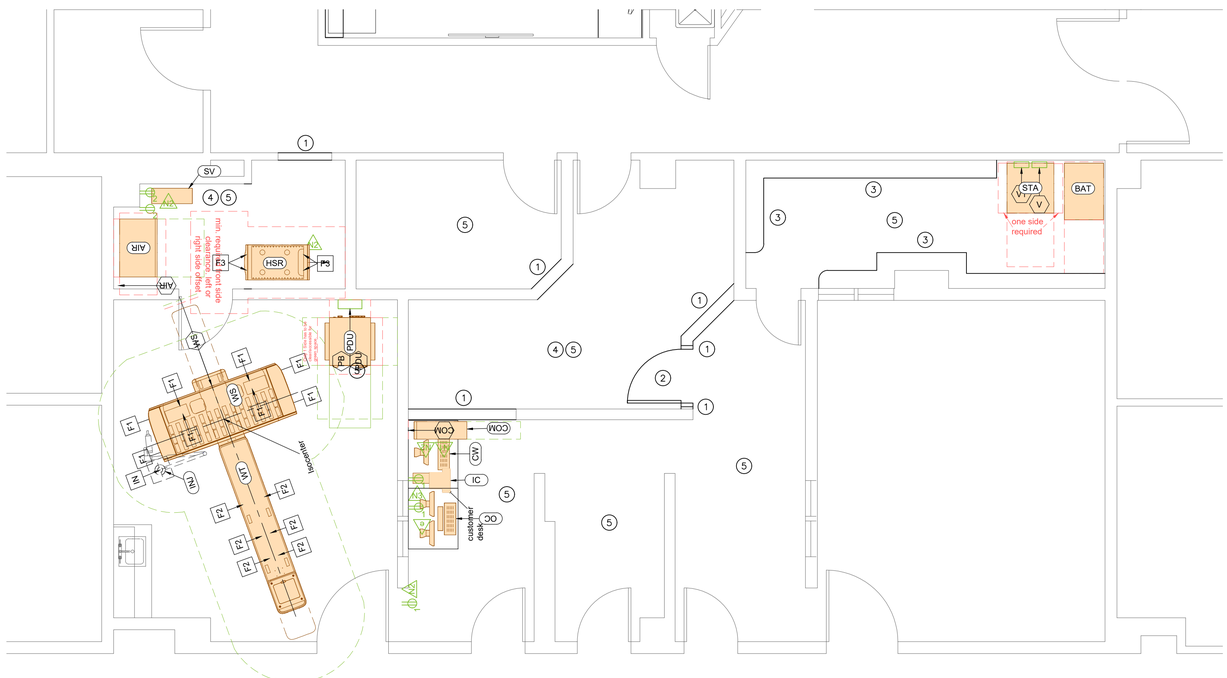

2 ARCHITECTURAL RENOVATION
SCALE: 1/4" = 1'-0"

ARCH. RENOVATION KEYED NOTES: #

1. INSTALL NEW WALL.
2. INSTALL NEW DOOR & FRAME.
3. INSTALL NEW SHELVING.
4. INSTALL NEW FLOORING.
5. PATCH AND PAINT.

N

SCALE IN FEET
0 1' 2' 4' 8'

Revision	Date	No.

THE University of Vermont MEDICAL CENTER

MCHV

McClure Level 1 Room 2
Spectral CT 7500

ARCHITECTURAL DEMO & RENO

Drawn By:	PCB
Date:	12/17/2021
Scale:	As Noted
Sheet No:	A-1

File Location: S:\GROUPS\FACILITIES PD\PROJECTS\01 OPEN PROJECTS\UNASSIGNED\2021\MCCLURE LEVEL 1 NEW ROOM 2 SPECTRAL CT 7500 (1PXXX)\04-DESIGN AND CONSTRUCTION DOCUMENTS\DRAWINGS\P&D DRAWINGS\SPECTRAL CT 7500 ROOM 2 12_15_2021.DWG

Exhibit 4
Site/Floor Plan Essex Primary Care Mobile Pad

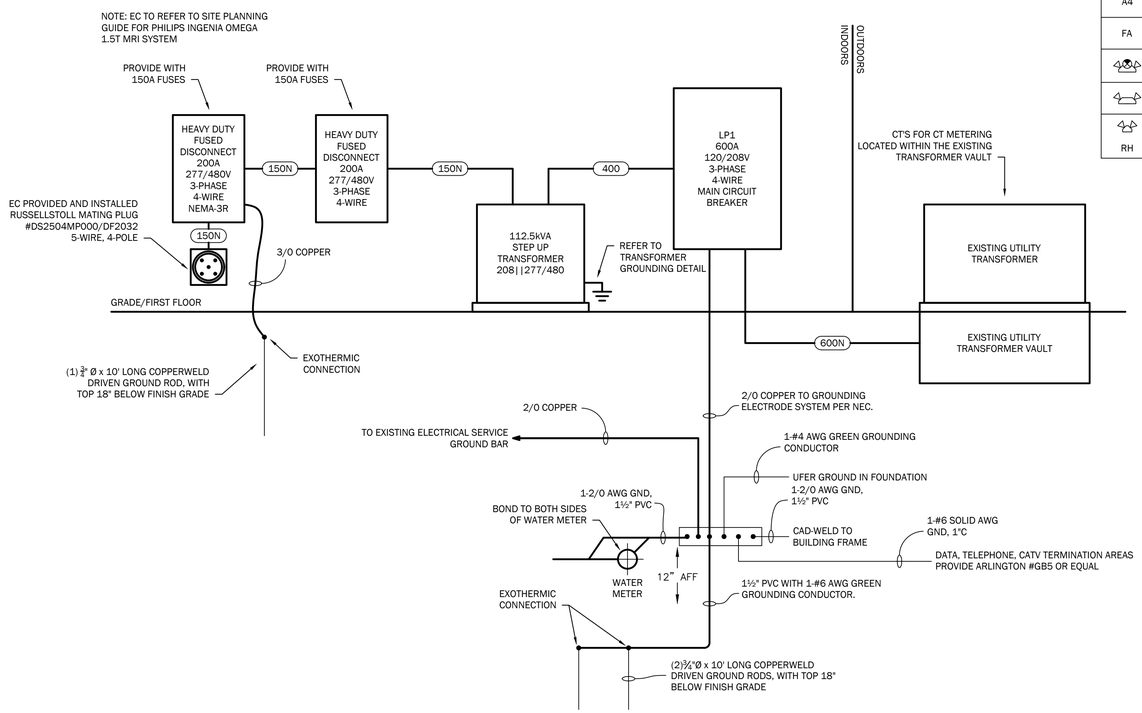

LIGHTING FIXTURE SCHEDULE

TYPE	MANUFACTURER & MODEL NO.	DESCRIPTION	LAMPS	WATTS	LUMENS	VOLTS	REMARKS
A4	LITHONIA LIGHTING CSS-L48-AL03-MVOLT-40K-80CRI	4FT SURFACE	LED	35.8	4206	120/ 277	SWITCHABLE LUMENS
FA	LITHONIA LIGHTING 2BLT2-40LHE-ADSM-GZ1-LP840	2x2 TROFFER	LED	30.8	4063	120/ 277	
	LITHONIA LIGHTING LHQM-LED-R-HO	COMBINATION EXIT/EMERGENCY	LED	3.5	-	120/ 277	REMOTE HEAD CAPABILITY
	LITHONIA LIGHTING ELM6L-UVOLT-LTP-SDRT	EMERGENCY LIGHT	LED	3.15	-	120/ 277	
RH	LITHONIA LIGHTING ELA-T-QWP-L0309	EXIT SIGN	LED	1	-	120/ 277	

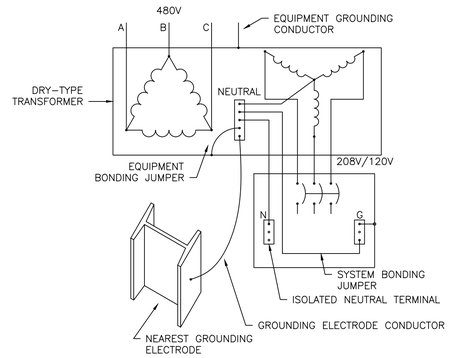

TRANSFORMER GROUNDING DETAIL

NOT TO SCALE

ELECTRICAL LEGEND

- LED LIGHT
- LIGHT FIXTURES
- EXIT LIGHT
- EMERGENCY LIGHT
- $ SWITCH - SINGLE POLE, SERVICE SWITCH FOR MOTORS
- $3 SWITCH - 3-WAY
- $4 SWITCH - 4-WAY
- $OC SWITCH - OCCUPANCY - ACUITY CONTROLS SENSOR SWITCH WSX-PDT-SA
- ELECTRICAL DISTRIBUTION PANEL
- BRANCH CIRCUIT
- MOTOR STARTER PROVIDED BY MC, INSTALLED BY EC
- SAFETY DISCONNECT PROVIDED AND INSTALLED BY EC
- DUPLEX RECEPTACLE
- GFI DUPLEX RECEPTACLE - GFCI PROTECTED
- DUPLEX RECEPTACLE - COUNTER HEIGHT
- WP DUPLEX RECEPTACLE - WATERPROOF
- SPECIAL PURPOSE OUTLET
- PHONE/DATA LOCATION WITH 2-PORT CAT 6, RJ-45 FLUSH MOUNTED WALL JACK WITH (2)CAT 6 HOMERUNS, PROVIDE NUMBER OF CABLES WHERE OTHERWISE NOTED
- 15 F FIRE ALARM HORN/STROBE (NUMBER DENOTES CANDELA)
- 15 S FIRE ALARM STROBE
- F FIRE ALARM MANUAL PULL STATION - 48" AFF

AFF	ABOVE FINISH FLOOR
EC	ELECTRICAL CONTRACTOR (DIVISION 26)
MC	MECHANICAL CONTRACTOR (DIVISION 23)
CM	CONSTRUCTION MANAGER
GC	GENERAL CONTRACTOR

FEEDER SCHEDULE

MARK	AMPS	PHASE	CONDUIT	WIRE SIZE	GROUND
600N	600	3	(2) 4"	(2) 500 MCM-XHHW-AL PER PHASE AND NEUTRAL	-
400	400	3	(2) 2½"	(2) 250 MCM-XHHW-AL PER PHASE	(2) #1 AL
150N	150	3	(1) 2"	(1) 3/0 XHHW-AL PER PHASE AND NEUTRAL	#4 AL

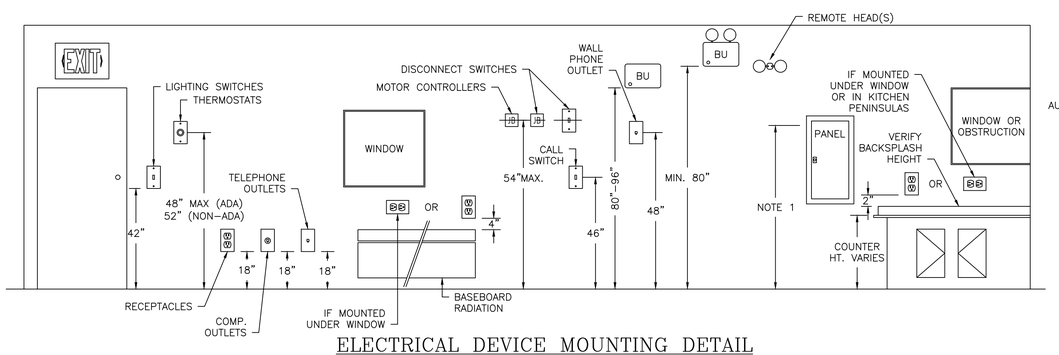

ELECTRICAL DEVICE MOUNTING DETAIL

NOT TO SCALE

NOTES:

1. PANELBOARDS TO BE MOUNTED NOT HIGHER THAN 6' TO HIGHEST CIRCUIT BREAKER. IN UNITS DESIGNATED AS HANDICAPPED ACCESSIBLE, MOUNT SO THAT HIGHEST CIRCUIT BREAKER IS NOT HIGHER THAN 4' AFF. PANELS WITH HANDICAP ACCESS SHALL BE MOUNTED SO THAT HIGHEST CIRCUIT BREAKER IS NOT HIGHER THAN 4' AFF. COORDINATE WITH ARCHITECT.
2. THE ABOVE MOUNTING HEIGHTS SHALL APPLY TO ALL DEVICES UNLESS NOTED OTHERWISE ON PLANS. ALL NOTED DIMENSIONS ARE TO THE CENTERLINE OF THE DEVICE FROM THE FINISHED FLOOR.
3. WHERE EXISTING OR SPECIAL CONDITIONS PREVENT THE INSTALLATION OF DEVICES AT THE ABOVE HEIGHTS, THE E.C. SHALL VERIFY HEIGHTS ON SITE WITH ARCHITECTS.
4. ALL DEVICES IN FINISHED AREAS SHALL BE INSTALLED IN FLUSH DEVICE BOXES. NO SURFACE BOXES SHALL BE ALLOWED WITHOUT PRIOR APPROVAL OF THE ARCHITECT.
5. EC SHALL VERIFY FINAL WORKBENCH, COUNTER, CABINET, OR VANITY HEIGHTS INCLUDING BACKSPLASH, ON SITE WITH GC PRIOR TO INSTALLATION OF BOXES.

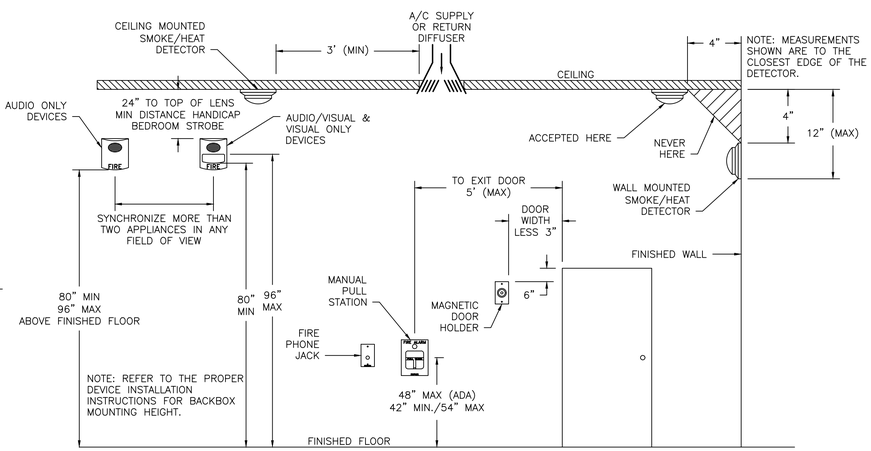

FIRE ALARM DEVICE MOUNTING DETAIL

NOT TO SCALE

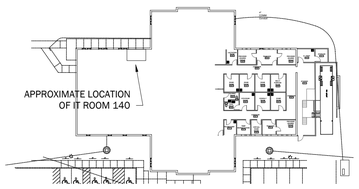

KEY PLAN

NOT TO SCALE

DESIGN DEVELOPMENT NOT FOR CONSTRUCTION 4/15/22

Pearson & Associates
MECHANICAL & ELECTRICAL ENGINEERS
A SUBSIDIARY OF DuBOIS & KING INC.
P.O. BOX 119, WATERBURY, VERMONT 05676
TEL (802) 882-8789
www.pearsonandassociates.com

NUMBER	DATE	REVISION	BY

PROJECT NAME: ESSEX PRIMARY CARE
ESSEX, VT

SHEET TITLE: LEGENDS, SCHEDULES, AND DETAILS

I:\727891 Essex Primary Care\Drawings\Electrical\727891 Essex Primary Care Electrical Drawings.dwg

DATE:	04/15/22
SCALE:	AS NOTED
JOB NO:	727891
DRAWN BY:	BDF
APPROVED BY:	ASG
DWG. NO.	E1

SHEET 1 OF 2

Apr 15, 2022

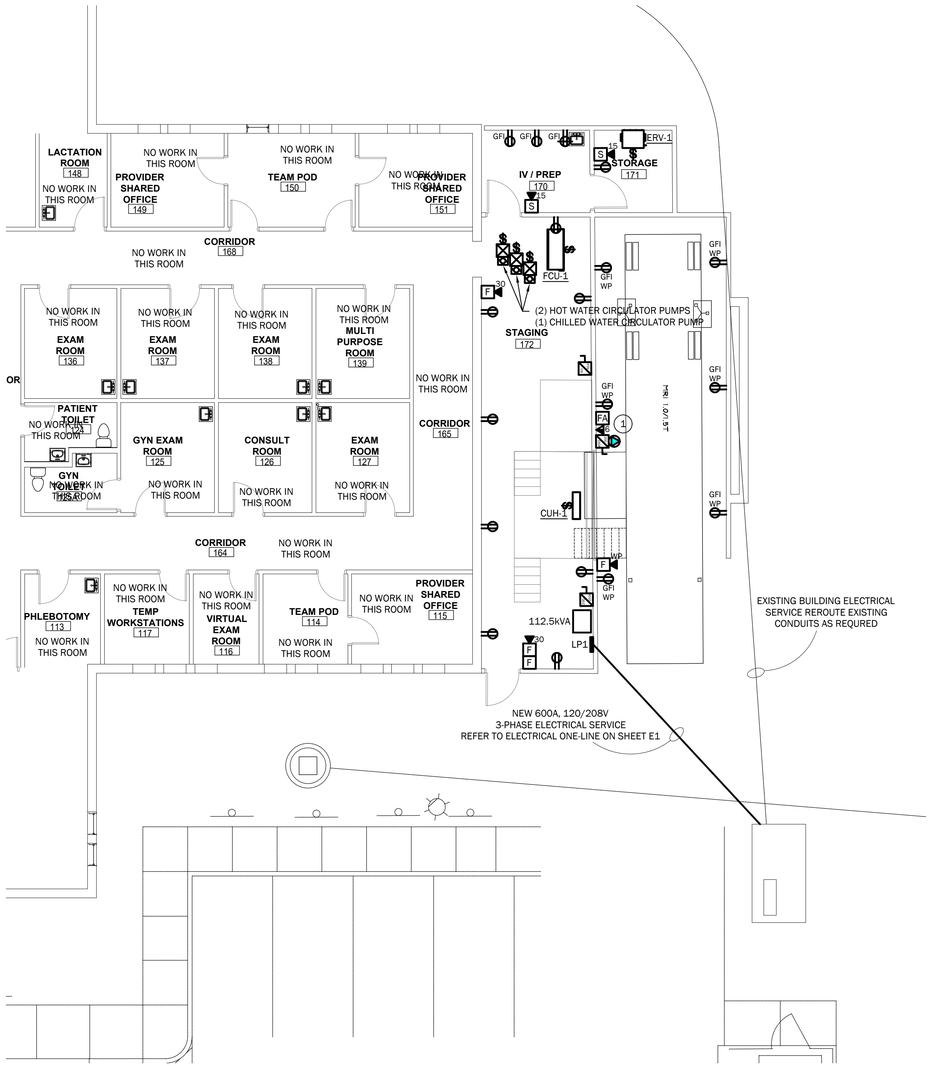

FIRST FLOOR POWER AND FIRE ALARM PLAN

SCALE: 1/8" = 1'-0"

HORIZONTAL SCALE IN FEET

8 4 0 8 16 24 32

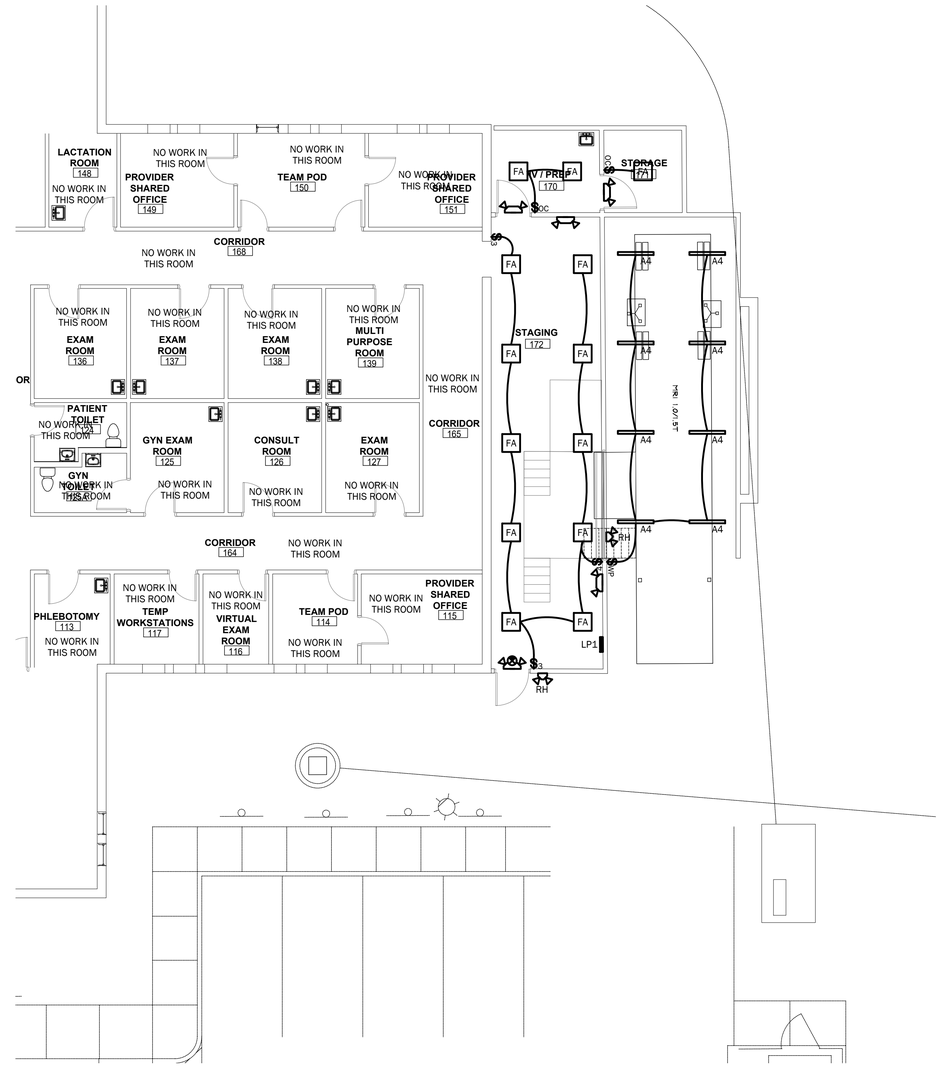

FIRST FLOOR LIGHTING PLAN

SCALE: 1/8" = 1'-0"

HORIZONTAL SCALE IN FEET

8 4 0 8 16 24 32

KEYED NOTES:

1. THE EC IS TO PROVIDE THE FOLLOWING FOR THE NEW PORTABLE MRI HOOKUP. EXACT LOCATIONS FOR ALL DEVICES TO BE COORDINATED WITH THE ARCHITECT AND OWNER PRIOR TO ROUGH IN WIRING.
   - 200A, 480V, 3-PHASE, 4-WIRE HEAVY DUTY FUSED DISCONNECT WITH 150A FUSES AND A 150A 480V, 3-PHASE ELECTRICAL FEED FROM THE NEW 112.5kVA TRANSFORMER IN STAGING ROOM 172, REFER TO ELECTRICAL ONE-LINE DIAGRAM ON SHEET E1.
   - 200A, 480V, 3-PHASE PLUG - REFER TO ELECTRICAL ONE-LINE DIAGRAM ON SHEET E1.
   - (3) HUBBELL PH-6597 ALL WEATHER PHONE OUTLETS AND (3) RJ-45 DATA OUTLETS. ALL NEW TELEPHONE AND DATA CABLING TO TERMINATE IN IT DATA ROOM 140.
   - A REMOTE FIRE ALARM ANNUNCIATION CIRCUIT CONNECTION, AND A REMOTE FIRE ALARM CONNECTION TO A MONITORING MODULE FOR FIRE ALARM INITIATION DEVICES.

DESIGN DEVELOPMENT
NOT FOR CONSTRUCTION 4/15/22

Pearson & Associates
MECHANICAL & ELECTRICAL ENGINEERS
A SUBSIDIARY OF DuBOIS & KING INC.
P.O. BOX 119, WATERBURY, VERMONT 05676
TEL (802) 882-8789
www.pearsonandassociates.com

NUMBER	DATE	REVISION	BY

PROJECT NAME: ESSEX PRIMARY CARE
ESSEX, VT

SHEET TITLE: ELECTRICAL FLOOR PLANS

I:\727891 Essex Primary Care\Drawings\Electrical\727891 Essex Primary Care Electrical Drawings.dwg

DATE:	04/15/22
SCALE:	AS NOTED
JOB NO:	727891
DRAWN BY:	BDF
APPROVED BY:	ASG

DWG. NO.

E2

SHEET 2 OF 2

Apr 15, 2022

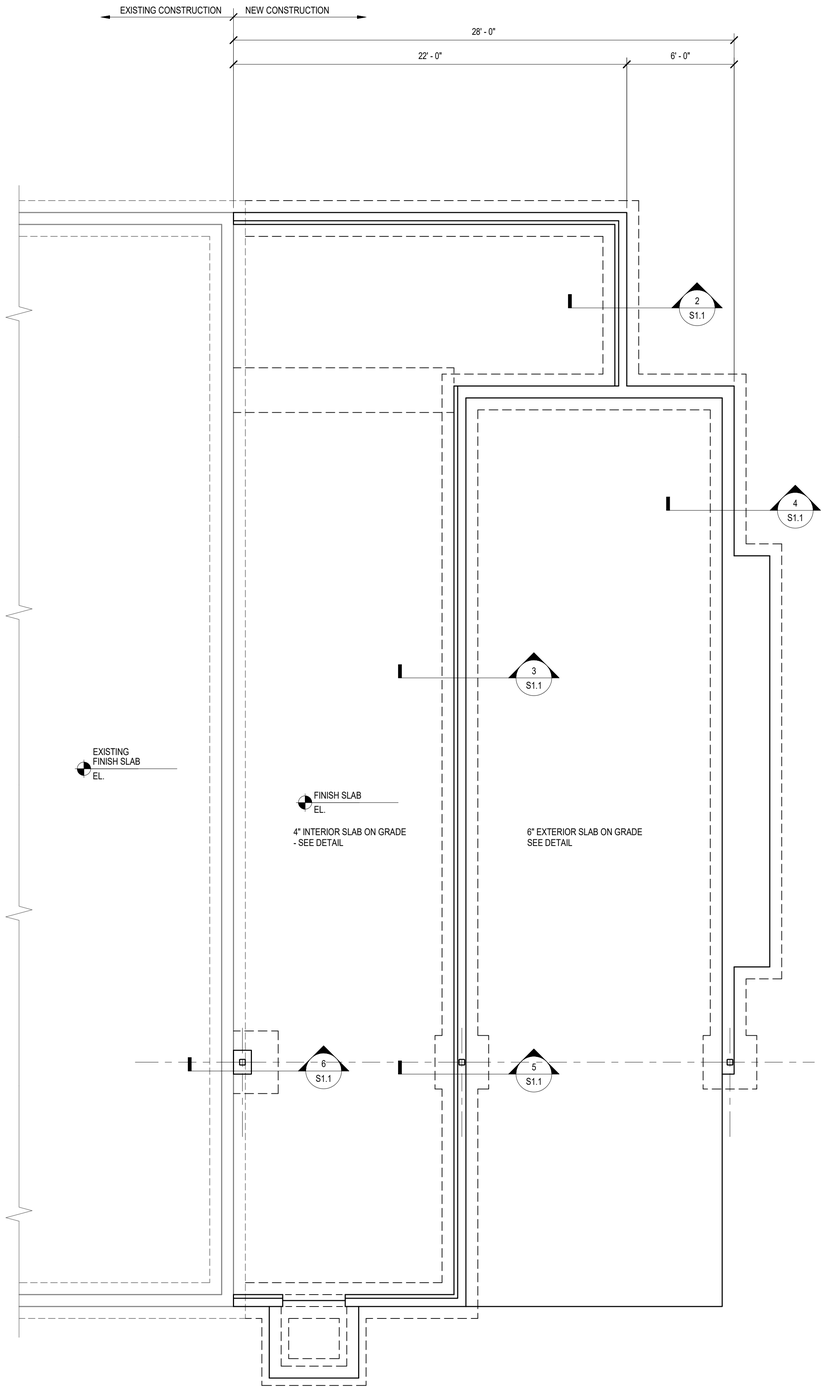

1 FOUNDATION PLAN
1/4" = 1'-0"

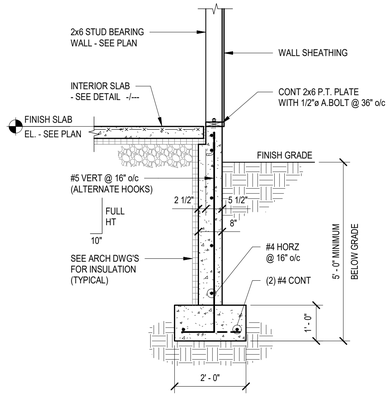

2 SECTION
1/2" = 1'-0"

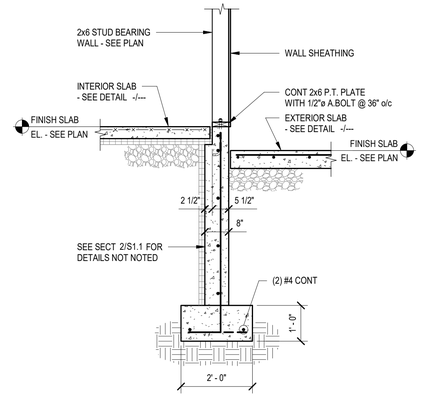

3 SECTION
1/2" = 1'-0"

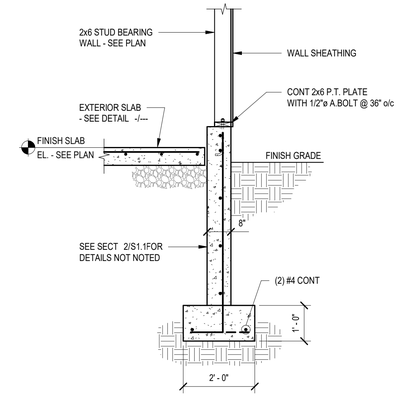

4 SECTION
1/2" = 1'-0"

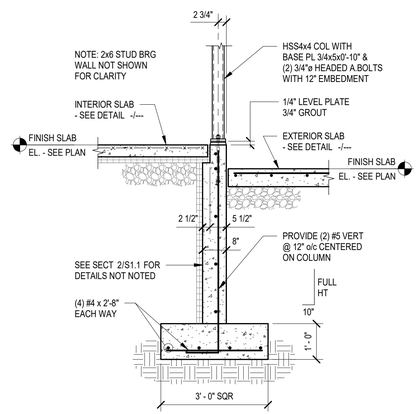

5 SECTION
1/2" = 1'-0"

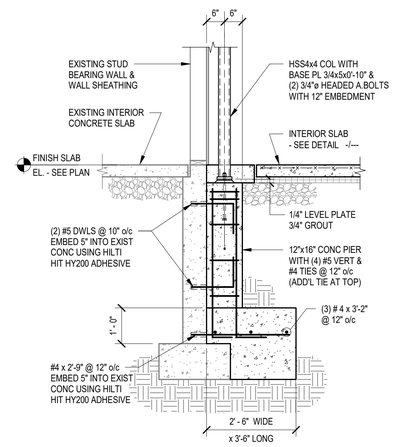

6 SECTION
1/2" = 1'-0"

Stamp

No.	Description	Date

ENGINEERING VENTURES PC
208 Flynn Avenue
Burlington, VT 05401
(802) 863-6225
85 Mechanic Street
Suite B-3
Lebanon, NH 03766
(603) 442-9333
414 Union Street
Schenectady, NY 12305
(518) 205-9141
www.engineeringventures.com

25 Crossroad
Williston, VT 05676
(802) 244-5220
www.josepharchitects.com
JOSEPH ARCHITECTS
Architecture, Planning & Sustainable Design

Sheet Title: FOUNDATION PLAN

Project Title: UCMMC REMOTE MODALITY UNITS
ESSEX, VERMONT

Designed By:	Designer
Checked By:	Checker
Drawn By:	Author
Scale:	
Date:	Issue Date

S1.1

EV Project #22039

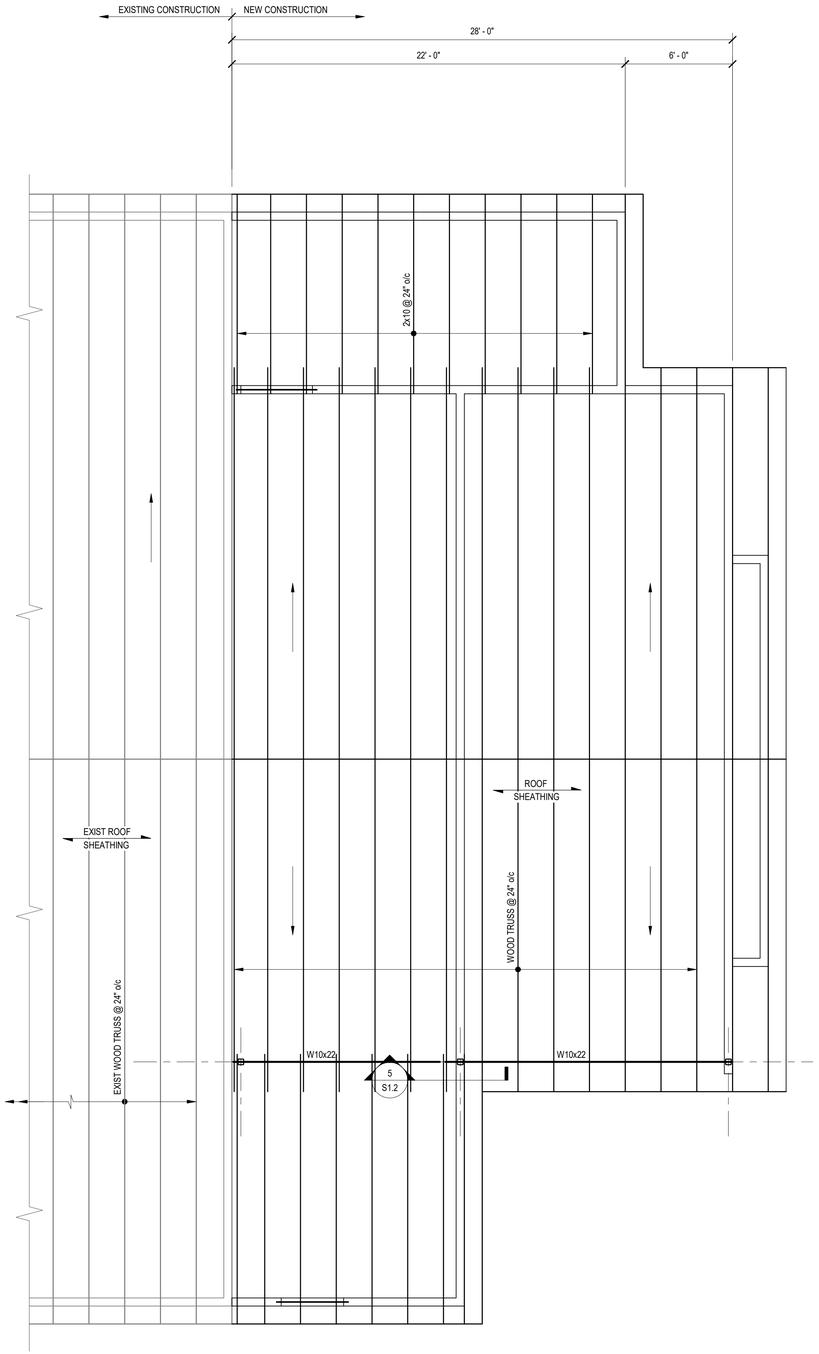

1 ROOF FRAMING PLAN
1/4" = 1'-0"

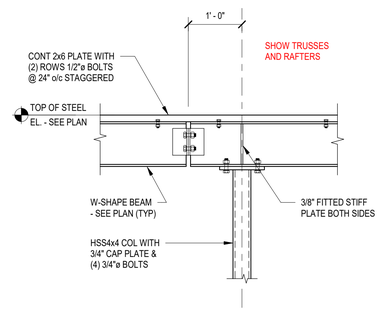

5 SECTION
3/4" = 1'-0"

Stamp

No.	Description	Date

ENGINEERING VENTURES PC
208 Flynn Avenue Suite 3A Burlington, VT 05401 (802) 863-6225
85 Mechanic Street Suite C3-3 Lebanon, NH 03766 (603) 442-9333
414 Union Street Schenectady, NY 12305 (518) 205-9141
www.engineeringventures.com

JOSEPH ARCHITECTS Architecture, Planning & Sustainable Design
26 Crossroad Williston, VT 05676 (802) 244-5220 www.josepharchitects.com

Sheet Title: ROOF FRAMING PLAN

Project Title: UCMMC REMOTE MODALITY UNITS
ESSEX, VERMONT

Designed By:	Designer
Checked By:	Checker
Drawn By:	Author
Scale:	
Date:	Issue Date

S1.2

EV Project #22039

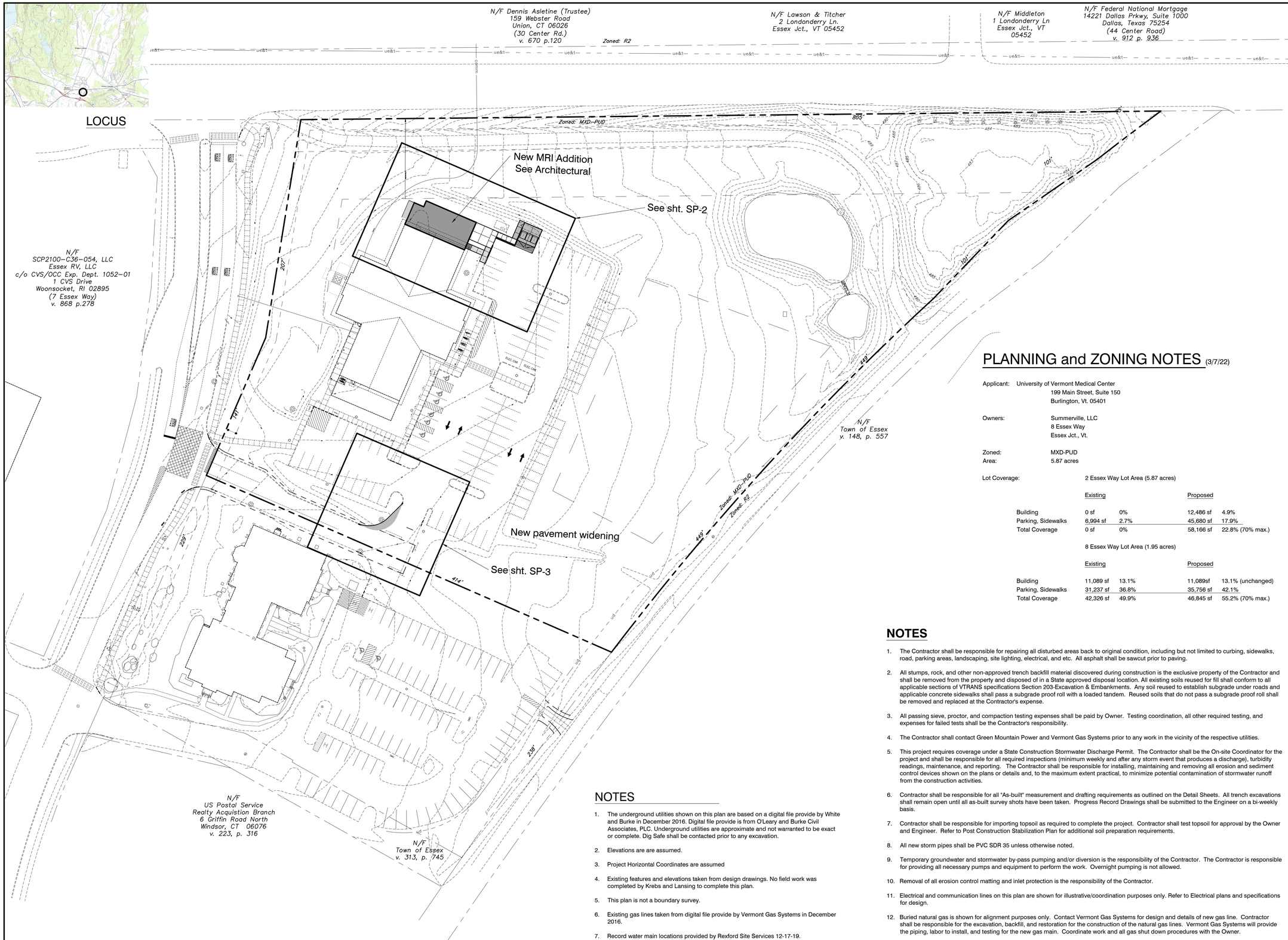

NOTES

1. The underground utilities shown on this plan are based on a digital file provide by White and Burke in December 2016. Digital file provide is from O'Leary and Burke Civil Associates, PLC. Underground utilities are approximate and not warranted to be exact or complete. Dig Safe shall be contacted prior to any excavation.
2. Elevations are are assumed.
3. Project Horizontal Coordinates are assumed
4. Existing features and elevations taken from design drawings. No field work was completed by Krebs and Lansing to complete this plan.
5. This plan is not a boundary survey.
6. Existing gas lines taken from digital file provide by Vermont Gas Systems in December 2016.
7. Record water main locations provided by Rexford Site Services 12-17-19.

PLANNING and ZONING NOTES (3/7/22)

Applicant: University of Vermont Medical Center
199 Main Street, Suite 150
Burlington, Vt. 05401

Owners: Summerville, LLC
8 Essex Way
Essex Jct., Vt.

Zoned: MXD-PUD
Area: 5.87 acres

Lot Coverage: 2 Essex Way Lot Area (5.87 acres)

	Existing		Proposed	
Building	0 sf	0%	12,486 sf	4.9%
Parking, Sidewalks	6,994 sf	2.7%	45,680 sf	17.9%
Total Coverage	0 sf	0%	58,166 sf	22.8% (70% max.)

8 Essex Way Lot Area (1.95 acres)

	Existing		Proposed	
Building	11,089 sf	13.1%	11,089sf	13.1% (unchanged)
Parking, Sidewalks	31,237 sf	36.8%	35,756 sf	42.1%
Total Coverage	42,326 sf	49.9%	46,845 sf	55.2% (70% max.)

NOTES

1. The Contractor shall be responsible for repairing all disturbed areas back to original condition, including but not limited to curbing, sidewalks, road, parking areas, landscaping, site lighting, electrical, and etc. All asphalt shall be sawcut prior to paving.
2. All stumps, rock, and other non-approved trench backfill material discovered during construction is the exclusive property of the Contractor and shall be removed from the property and disposed of in a State approved disposal location. All existing soils reused for fill shall conform to all applicable sections of VTRANS specifications Section 203-Excavation & Embankments. Any soil reused to establish subgrade under roads and applicable concrete sidewalks shall pass a subgrade proof roll with a loaded tandem. Reused soils that do not pass a subgrade proof roll shall be removed and replaced at the Contractor's expense.
3. All passing sieve, proctor, and compaction testing expenses shall be paid by Owner. Testing coordination, all other required testing, and expenses for failed tests shall be the Contractor's responsibility.
4. The Contractor shall contact Green Mountain Power and Vermont Gas Systems prior to any work in the vicinity of the respective utilities.
5. This project requires coverage under a State Construction Stormwater Discharge Permit. The Contractor shall be the On-site Coordinator for the project and shall be responsible for all required inspections (minimum weekly and after any storm event that produces a discharge), turbidity readings, maintenance, and reporting. The Contractor shall be responsible for installing, maintaining and removing all erosion and sediment control devices shown on the plans or details and, to the maximum extent practical, to minimize potential contamination of stormwater runoff from the construction activities.
6. Contractor shall be responsible for all "As-built" measurement and drafting requirements as outlined on the Detail Sheets. All trench excavations shall remain open until all as-built survey shots have been taken. Progress Record Drawings shall be submitted to the Engineer on a bi-weekly basis.
7. Contractor shall be responsible for importing topsoil as required to complete the project. Contractor shall test topsoil for approval by the Owner and Engineer. Refer to Post Construction Stabilization Plan for additional soil preparation requirements.
8. All new storm pipes shall be PVC SDR 35 unless otherwise noted.
9. Temporary groundwater and stormwater by-pass pumping and/or diversion is the responsibility of the Contractor. The Contractor is responsible for providing all necessary pumps and equipment to perform the work. Overnight pumping is not allowed.
10. Removal of all erosion control matting and inlet protection is the responsibility of the Contractor.
11. Electrical and communication lines on this plan are shown for illustrative/coordination purposes only. Refer to Electrical plans and specifications for design.
12. Buried natural gas is shown for alignment purposes only. Contact Vermont Gas Systems for design and details of new gas line. Contractor shall be responsible for the excavation, backfill, and restoration for the construction of the natural gas lines. Vermont Gas Systems will provide the piping, labor to install, and testing for the new gas main. Coordinate work and all gas shut down procedures with the Owner.
13. Refer to Plumbing plans for waterline and sewer design within five feet of building.

THE University of Vermont MEDICAL CENTER

KREBS & LANSING CONSULTING ENGINEERS
164 Main Street, Suite 201
Colchester, Vermont 05446
P: (802) 878-0375
www.krebsandlansing.com

For Permit Review

NO.	DESCRIPTION	DATE

Approx. North

0' 40' 80' 120'
Bar Scale 1" = 40'

ESSEX PRIMARY CARE

LOT 2, ESSEX WAY

CONTENT:

OVERALL SITE PLAN

PROGRESS 3/7/22

16296-MXMXP-SX-PC-SP-2022.dwg

DRAWN BY:	SLM
PROJECT NO:	16296
DATE:	3/1/22
REVISED:	
SCALE:	1" = 40'

SP-1

Install straw wattles along downslope limits of disturbance prior to earth disturbance, typical.

Topsoil, seed, and properly secure mulch in all disturbed areas as soon as possible.

New 3' gate

Install new chain link fence and gates. See detail

Remove and dispose of existing multi-use concrete sidewalk

Relocate existing underground power

Remove and dispose of existing multi-use concrete dumpster pad

Install two new bollards. See detail

Remove or relocate existing bollard

Remove existing curb

Remove existing concrete, asphalt and gravel base. Rebuild with full depth parking section.

New MRI Addition
See Architectural

Relocate landscaping

Extend 18" wide drip edge to end of new building

Remove existing curb

End curb

Remove and dispose of existing concrete sidewalk

Pin new concrete sidewalk to building foundation. See detail

6' transition

Sawcut existing concrete sidewalk and curb

Install inlet protection around all existing and new catch basins that collect runoff from construction related activities.

LEGEND

12	Survey Control Point
	Existing Sign
	Existing Light Pole
x314.7	Existing Spot Grade Elevation
s	Existing Sewer Line/Manhole
st	Existing Storm Line/Manhole/Basin
comm	Existing Communications Line
ugp	Existing Underground Power
	Approximate Property Line
	Existing Setback
153	Finish Grade Minor Contour
UGP	Proposed Underground Power
	Asphalt Replace Full Depth
	Concrete sidewalk
	Multi-Use Concrete Sidewalk
	Heavy Duty Concrete sidewalk
	Structural (see Structural drawings)

0' 6' 12' 24' 36'

BAR SCALE 1" = 6'

THE University of Vermont MEDICAL CENTER

KREBS & LANSING CONSULTING ENGINEERS
164 Main Street, Suite 201
Colchester, Vermont 05446
P: (802) 878-0375
www.krebsandlansing.com

For Permit Review

NO.	DESCRIPTION	DATE

ESSEX PRIMARY CARE

LOT 2, ESSEX WAY

CONTENT:

CIVIL SITE PLAN

PROGRESS 3/4/22

16296_AMMD_SX_PC_SIP_03-22.dwg

DRAWN BY:	SLM
PROJECT NO:	16296
DATE:	3/1/22
REVISED:	
SCALE:	1" = 6'

SP-2

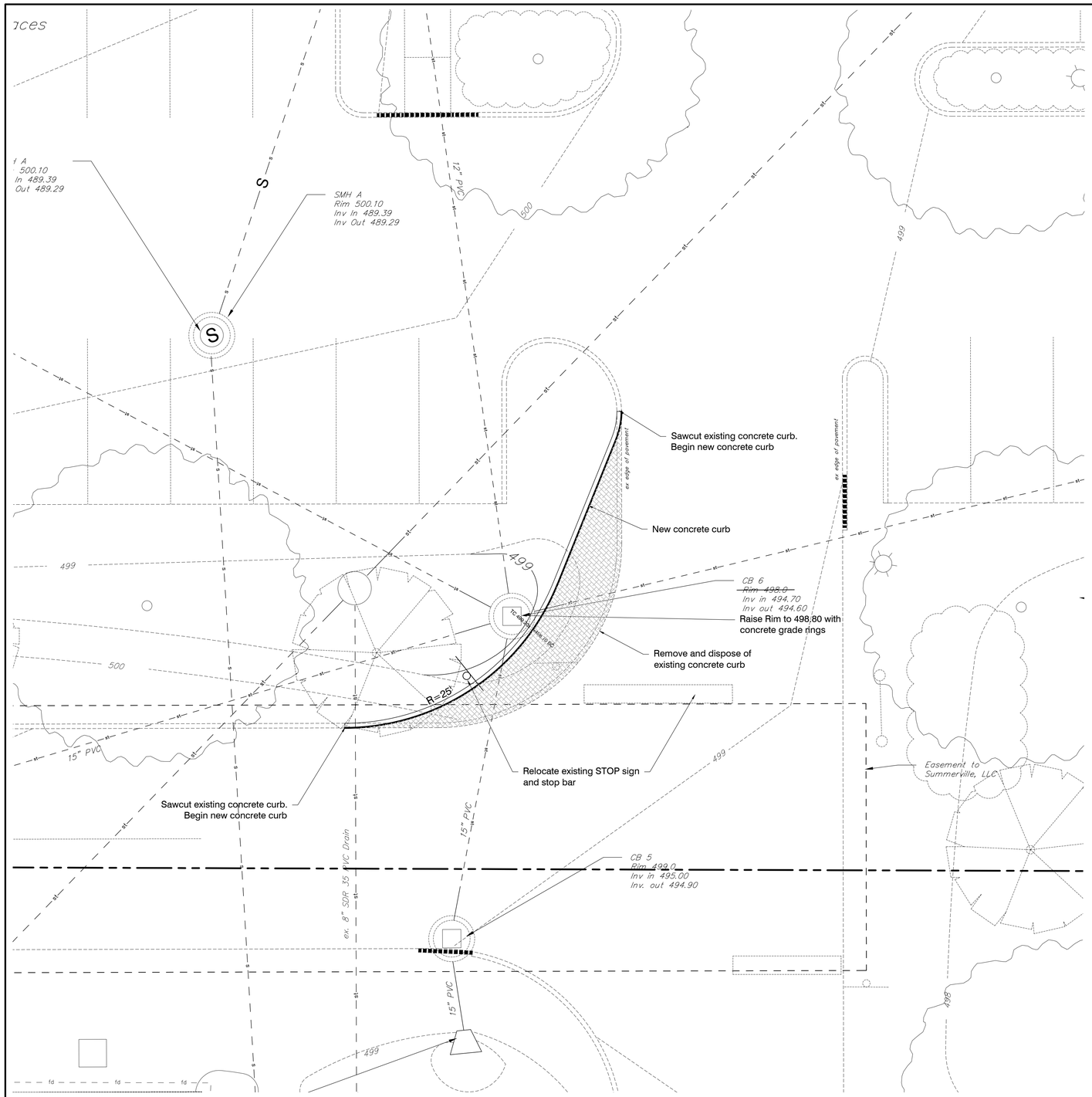

LEGEND

- Survey Control Point
- Existing Sign
- Existing Light Pole
- Existing Spot Grade Elevation
- Existing Sewer Line/Manhole
- Existing Storm Line/Manhole/Basin
- Existing Communications Line
- Existing Underground Power
- Approximate Property Line
- Existing Setback
- Finish Grade Minor Contour
- Proposed Underground Power
- Asphalt Replace Full Depth
- Concrete sidewalk
- Multi-Use Concrete Sidewalk
- Heavy Duty Concrete sidewalk
- Structural (see Structural drawings)

0' 6' 12' 24' 36'

BAR SCALE 1" = 6'

THE University of Vermont MEDICAL CENTER

KREBS & LANSING CONSULTING ENGINEERS

164 Main Street, Suite 201
Colchester, Vermont 05446

P: (802) 878-0375
www.krebsandlansing.com

For Permit Review

NO.	DESCRIPTION	DATE

ESSEX PRIMARY CARE

LOT 2, ESSEX WAY

CONTENT:

CIVIL SITE PLAN

PROGRESS 3/7/22

16296 COMMON-SX PC SITE PLAN.dwg

DRAWN BY:	SLM
PROJECT NO:	16296
DATE:	3/7/22
REVISED:	
SCALE:	1" = 6'

SP-3

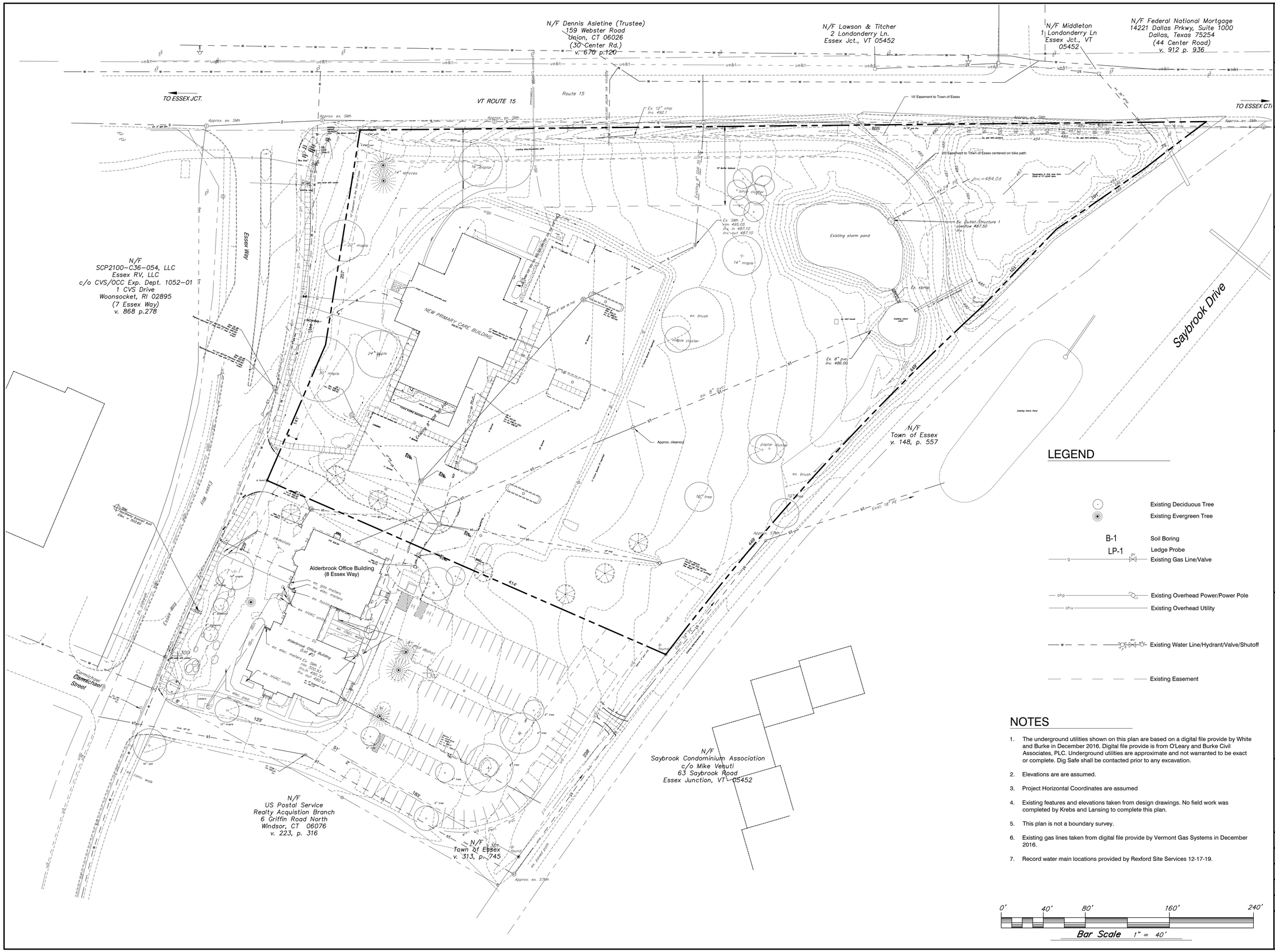

NOTES

1. The underground utilities shown on this plan are based on a digital file provide by White and Burke in December 2016. Digital file provide is from O'Leary and Burke Civil Associates, PLC. Underground utilities are approximate and not warranted to be exact or complete. Dig Safe shall be contacted prior to any excavation.
2. Elevations are are assumed.
3. Project Horizontal Coordinates are assumed
4. Existing features and elevations taken from design drawings. No field work was completed by Krebs and Lansing to complete this plan.
5. This plan is not a boundary survey.
6. Existing gas lines taken from digital file provide by Vermont Gas Systems in December 2016.
7. Record water main locations provided by Rexford Site Services 12-17-19.

THE University of Vermont MEDICAL CENTER

KREBS & LANSING CONSULTING ENGINEERS
164 Main Street, Suite 201
Colchester, Vermont 05446
P: (802) 878-0375
www.krebsandlansing.com

For Permit Review

NO.	DESCRIPTION	DATE

ESSEX PRIMARY CARE

LOT 2, ESSEX WAY

CONTENT:

EXISTING CONDITIONS SITE PLAN

PROGRESS 3/7/22

16296 ESSEX PRIMARY CARE PC-SITE 2022.dwg

DRAWN BY:	SLM
PROJECT NO:	16296
DATE:	3/7/22
REVISED:	
SCALE:	1" = 40'

EX-1

All concrete used in the construction of concrete curb shall be air entrained and made with Portland cement. The concrete shall meet section 541 of the State of Vermont Standard Specification for Class A concrete and have 28 day compressive strength of 4,000 psi.

Concrete Curb

- Broom finish concrete
- All joints to be tool finished
- Expansion/contraction joints every 20' with 1/2" joint filler.
- Score 1/3 total depth at 10' intervals
- Apply 2 coats of Harris Emulsion Kurseal 309 cure/seal compound to all concrete surfaces, per the manufacturer's specifications.

Joint filler shall be resilient non-extruding cellular fiber joint, uniformly saturated with asphalt, offering a minimum of 70% recovery after compression.

The Engineer shall be contacted at least 24 hours prior to forming concrete curb to review layout.

The contractor shall sweep and apply emulsified asphalt to base course pavement prior to laying top course.

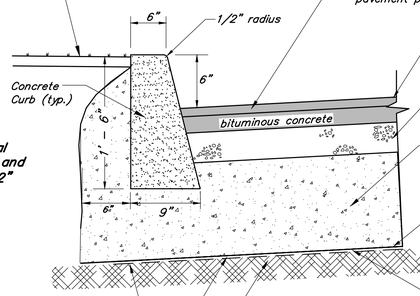

3" bit. conc.
1" Type IV - top
2" Type II - base

4" Leveling course (704.05, fine)

20" Dense Graded Crushed Stone (704.06) Alternative materials identified in Section 301 - Subbase are not allowed.

Mirafi 500X, or approved equal. Overlap minimum of 2'. Lay flat against subgrade. (no folds or wrinkles)

Contractor shall shape and roll subgrade to reflect finish grade drainage prior to installing Mirafi 500X.

Undisturbed material or compacted fill (See Note 13 Road Construction Notes) Remove all organics before placing fill or gravel.

The Contractor shall prepare the subgrade in conformance with the design grades then, in the presence of the Engineer, shall proof roll the subgrade with a loaded tandem dump truck. Conditions may require the removal of unsuitable material and placement of additional subbase. The Owner must approve any work involved with the removal of unsuitable material and placement of additional subbase.

Subbase material shall be placed and compacted in 12" maximum lifts.

The contractor to take sieve analysis of gravel as soon it arrives on site.

Travel over gravel with any vehicle tracking soil prior to placement of pavement is prohibited.

If gravel is contaminated after placement, the Site Contractor shall be responsible removal of all contaminated gravel and paying for all recommended sieve analysis as determined by the Engineer.

Typical Road Cross Section Detail

N.T.S.

All concrete used in the construction of concrete sidewalk shall be air entrained and made with Portland cement. The concrete shall meet section 541 of the State of Vermont Standard Specification for Construction for Class A concrete and have 28 day compressive strength of 4,000 psi.

Joint filler shall be resilient non-extruding cellular fiber joint, uniformly saturated with asphalt, offering a minimum of 70% recovery after compression.

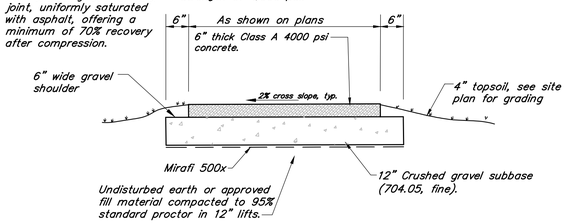

Concrete Notes

- Broom finish concrete
- Construction joints shall be spaced max. 24' in all directions. See Concrete Construction Joint Detail.
- Score control joints 1-1/2" depth at intervals equal to width of sidewalk. Contractor is responsible for providing appropriately sized tooling trowel.
- Apply 2 coats of Harris Emulsion Kurseal 309 cure/seal compound to all concrete surfaces, per the manufacturer's specifications.
- Concrete construction and curing shall conform to section 618.03 of the current VAOT Standard Specifications for Construction

New Concrete Sidewalk Detail

(For Concrete Walks 6ft. Wide or Less)

N.T.S.

All concrete used in the construction of concrete sidewalk shall be air entrained and made with Portland cement. The concrete shall meet section 541 of the State of Vermont Standard Specification for Construction for Class A concrete and have 28 day compressive strength of 4,000 psi.

Note:
Owner or Contractor is not allowed to place deicing materials on newly poured concrete sidewalk for a period of 6 months.

Concrete Slab

- Broom finish concrete
- Construction joints shall be spaced max. 24' in all directions. See New Concrete Construction Joint Detail.
- See Site Plan for construction joint and control joint layout.
- Apply 2 coats of Harris Emulsion Kurseal 309 siloxane/silane water repellant to all concrete surfaces, per the manufacturer's specifications. Product can be applied after 7 day curing is complete.
- Concrete construction and curing shall conform to section 618.03 of the current VAOT Standard Specifications for Construction

Concrete shall be installed in alternating pours at construction joints. Continuous pours through construction joints is not allowed. Refer to Concrete Construction Joint/Control Joint Detail.

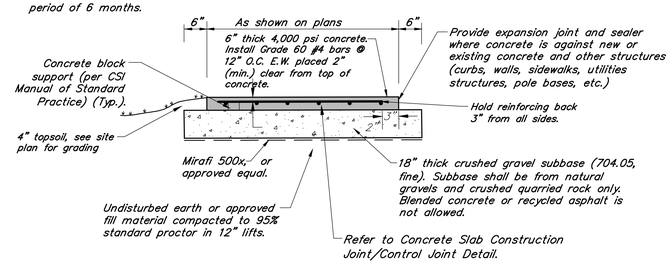

New Multi-Use Concrete Sidewalk Detail

To be used for concrete sidewalk and concrete spillways (2)

N.T.S.

Road Construction Notes

(All references to road shall apply to parking areas and sidewalks as well.)

1. New road shall be constructed to the line and grade shown on the drawings. The road and utility locations shall be as typically detailed unless otherwise shown.
2. All road and parking construction shall be completed in accordance with the Vermont Agency of Transportation "Standard Specifications for Construction" 2011, hereafter called Vermont Highway Specifications, specifications found on these plans, and project specifications. In case of conflict, the more stringent specification shall apply as determined by the Engineer.
3. The Contractor shall follow Vermont Highway Specifications (2011) Section 203.11 for placing and spreading embankments.
4. Fill material for road embankment shall meet Note #13 below and be approved by the Engineer. Fill shall be placed in 12" lifts, wetted and compacted with satisfactory compaction equipment to 95% of maximum density (Standard Proctor).
5. Road in fill sections shall be placed and compacted a minimum of 3 feet above top of any utility to be installed before trench is excavated for pipe placement. In trenches and cut sections, the Contractor shall provide all necessary sheeting, shoring and bracing to maintain compliance with all OSHA/VOSHA regulations.
6. Methods for construction of subgrade shall conform to Vermont Highway Specifications (2011) 203.12 or as determined by the Engineer.
7. Any subgrade or subbase disturbed by Contractor, or rendered unsuitable by construction machinery, shall be removed and replaced with approved granular backfill at the Contractor's expense. The subgrade shall be compacted to attain at least 95% of the maximum density (Standard Proctor) before placing road or embankment materials.
8. The Owner will pay for on site soils testing (compaction, sieve, and proctor). The Contractor shall pay for failing tests. The Contractor is fully responsible for coordinating all testing/inspections. Contractor shall provide minimum 24 hour notice to testing agency prior to placement of any item to be tested.
9. Sand borrow and cushion shall conform to Vermont Highway Specifications (2011) 703.03. Granular borrow shall conform to the Vermont Highway Specifications 703.04.
10. Gravel subbase for pavement shall conform to Vermont Highway Specifications (2011) 704.05, coarse. Substitute materials identified in VAOT Specifications Section 301 - Subbase are not allowed.
11. Leveling course shall conform to Vermont Highway Specifications (2011) 704.05, fine grading. Shoulders shall conform to Section 704.12, Aggregate for Shoulders.
12. Bituminous concrete pavement shall conform to Vermont Highway Specifications (2011) Section 404 and 406. Binder course shall be Type I + II, and finish wearing course shall be Type III, IV, or as detailed.
13. Embankment fill for all impervious areas, EXCLUDING BUILDINGS, shall be a sieve specification as follows:

Sieve	% Finer
4"	100
2"	85-100
#4	60-100
#200	30 maximum

14. Dense graded crushed stone, crushed gravel and sand borrow shall not be contaminated by work. Construction traffic shall not travel over exposed areas of this material.

All concrete used in the construction of Heavy Duty Concrete shall be made with Portland cement. The concrete shall meet section 541 of the State of Vermont Standard Specifications for Construction, have 28 day compressive strength of 5,000 psi, and meet the following mix design.

Max. water-cement ratio (lb./lb.)	0.44
Min. cement factor (lbs/C.Y.)	705
Entrained air content (%)	5 - 7
Slump (inches, before adding HRWR)	2 - 4

Use air entrained agent conforming to ASTM C260 with 5-7% total air. Use High Range Water Reducing agent conforming to ASTM C494 in all concrete.

Concrete shall be installed in alternating pours at construction joints. Refer to Concrete Construction Joint/Control Joint Detail

Contractor shall pour and finish one Sample Panel for approval by Owner and Engineer. All concrete shall match the quality and appearance of the Sample Panel. Any concrete that does not meet the standard shall be removed and replaced at no cost to the Owner.

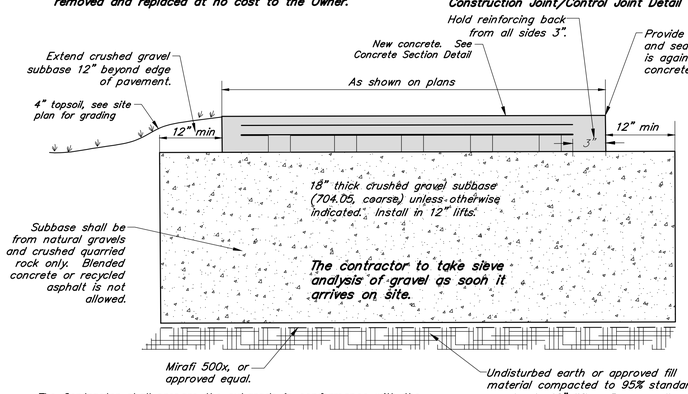

The Contractor shall prepare the subgrade in conformance with the design grades then, in the presence of the Engineer, shall proof roll the subgrade with a loaded tandem dump truck. Conditions may require the removal of unsuitable material and placement of additional subbase. The Owner must approve any work involved with the removal of unsuitable material and placement of additional subbase.

Subbase Section

Concrete Notes

- Broom finish concrete
- Construction joints shall be spaced as shown on the Site Plans (max. 20' in all directions). See Site Plan for layout.
- Sawcut control joints 1-1/2" depth as shown on the Site Plans or at intervals equal to the width of the sidewalk.
- Apply SpecChem Cure Shield EX cure and seal product to all concrete surfaces, per the manufacturer's specifications.
- Concrete construction and curing shall conform to section 618.03 of the current VAOT Standard Specifications for Construction

Note:
Owner or Contractor is not allowed to place deicing materials on newly poured concrete sidewalk for a period of 6 months.

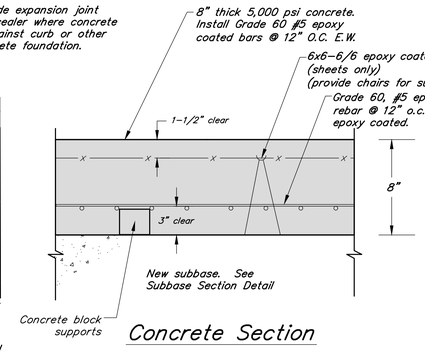

Concrete Section

Travel over gravel with any vehicle tracking soil prior to placement of pavement is prohibited.

If gravel is contaminated after placement, the Contractor shall be responsible removal of all contaminated gravel and paying for all recommended sieve analysis as determined by the Engineer.

New Heavy Duty Concrete Detail

THE University of Vermont MEDICAL CENTER

KREBS & LANSING CONSULTING ENGINEERS
164 Main Street, Suite 201
Colchester, Vermont 05446
P: (802) 878-0375
www.krebsandlansing.com

For Permit Review

NO.	DESCRIPTION	DATE

ESSEX PRIMARY CARE

LOT 2, ESSEX WAY

CONTENT:

CIVIL DETAILS

PROGRESS 3/7/22

16296_VMMC_SX_PC_Site_2022.dwg

DRAWN BY:	SLM
PROJECT NO:	16296
DATE:	3/1/22
REVISED:	
SCALE:	As Noted

CD-1

Sidewalk Construction Notes

1. New sidewalk shall be constructed to the line and grade shown on the drawings. The walks and utility locations shall be as typically detailed unless otherwise shown.
2. All sidewalk construction shall be completed in accordance with the Vermont Agency of Transportation "Standard Specifications for Construction" 2018, hereafter called Vermont Highway Specifications, specifications found on these plans, and project specifications. In case of conflict, the more stringent specification shall apply as determined by the Engineer.
3. The Contractor shall follow Vermont Highway Specifications (2018) Section 203.11 for placing and spreading embankments.
4. Fill material shall meet Note #13 below and be approved by the Engineer. Fill shall be placed in 12" lifts, wetted and compacted with satisfactory compaction equipment to 95% of maximum density (Standard Proctor).
5. Sidewalk in fill sections shall be placed and compacted a minimum of 3 feet above top of any utility to be installed before trench is excavated for pipe placement. In trenches and cut sections, the Contractor shall provide all necessary sheeting, shoring and bracing to maintain compliance with all OSHA/VOSHA regulations.
6. Methods for construction of subgrade shall conform to Vermont Highway Specifications (2018) 203.12 or as determined by the Engineer.
7. Construction traffic shall not travel over exposed areas of this material. Any subgrade or subbase disturbed by Contractor, or rendered unsuitable by construction machinery, shall be removed and replaced with approved granular backfill at the Contractor's expense.
8. The subgrade shall be compacted to attain at least 95% of the maximum density (Standard Proctor) before placing road or embankment materials.
9. The Owner will pay for on site soils testing (compaction, sieve, and proctor). The Contractor shall pay for failing tests.
10. Sand borrow and cushion shall conform to Vermont Highway Specifications (2018) 703.03. Granular borrow shall conform to the Vermont Highway Specifications 703.04.
11. Gravel subbase for pavement shall conform to Vermont Highway Specifications (2018) 704.05, crushed gravel. Substitute materials identified in VAOT Specifications Section 301 – Subbase are not allowed.
12. Where asphalt sidewalks are specified, Bituminous concrete pavement shall conform to Vermont Highway Specifications (2018) Section 404 and 406. Base course shall be Type II, and finish wearing course shall be Type IV, or as detailed.
13. Embankment fill for sidewalks, shall be a sieve specification as follows:

Sieve	% Finer
4"	100
2"	85–100
#4	60–100
#200	30 maximum

14. Dense graded crushed stone, crushed gravel and sand borrow shall not be contaminated by work. Construction traffic shall not travel over exposed areas of this material.
15. Contractor is responsible for all pavement markings (ie. parking striping, handicap markings, stop bars, etc.) shown or implied on the Plans. This includes both new and replacement of existing.
    - Paint for pavement markings shall be Hydrophast Waterborne Traffic Paint by Franklin Paint Company. It shall be reflective, VOC compliant, fast drying, 100% acrylic waterborne traffic paint. Paint for parking line striping shall be yellow. Confirm color of all other pavement markings with Owner prior to application.
    - Traffic paint shall be applied with a uniform thickness and at a rate such that no pavement is visible after drying. Additional paint application will be required if underlying pavement is visible.

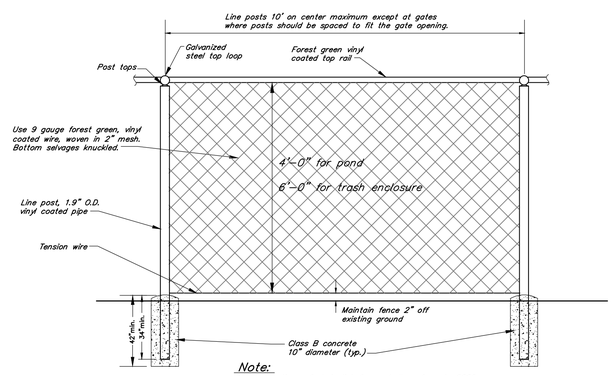

Note:
1. All portions of chain link fence shall conform to 2006 Agency of Transportation specifications, including but not limited to Section 727.02.
2. Refer to specifications for additional requirements.
3. All vinyl coated parts shall be forest green.

Typical Chain Link Fence
N.T.S.

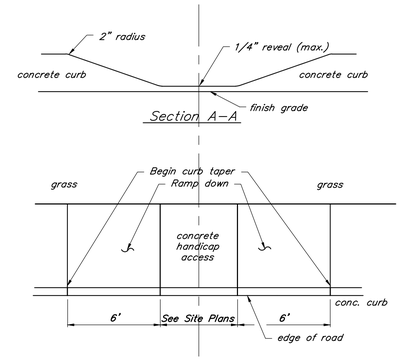

Concrete Curb Taper – 6'
N.T.S.

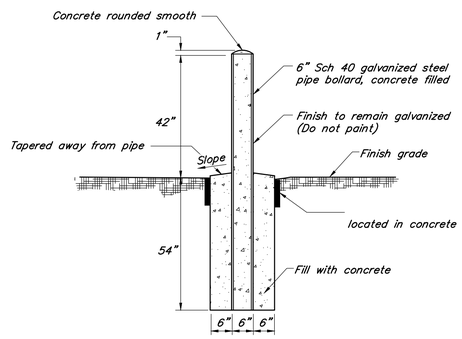

Bollard Detail
N.T.S.

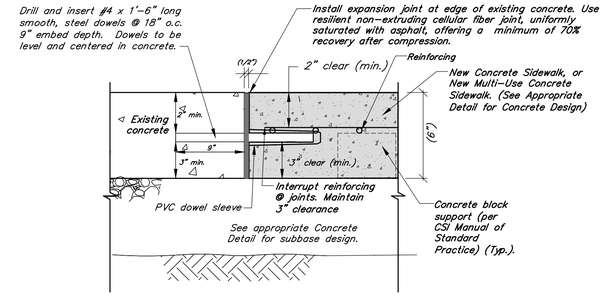

Construction Joint Detail for Connection to Existing Concrete
Contractor to use this pinning detail to pin NEW concrete to EXISTING concrete (walk to walk, walk to buildings, walk to retaining walls, stairs, etc).
N.T.S.

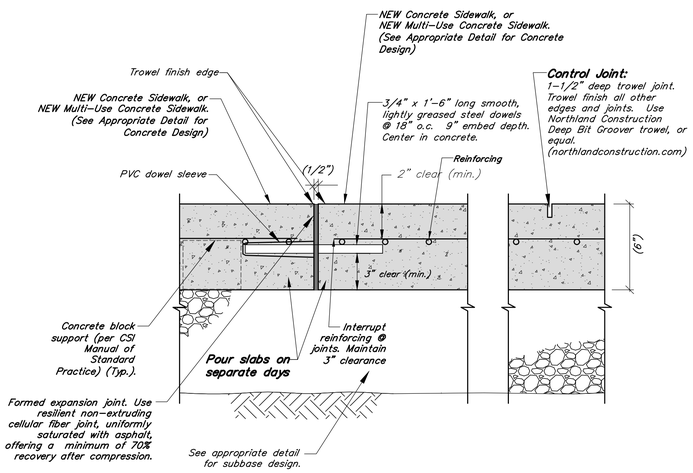

New Concrete Construction Joint/Control Joint Detail
Contractor to use this pinning detail to pin NEW concrete to NEW concrete (walk to walk, walk to buildings, walk to retaining walls, stairs, etc).
N.T.S.

THE University of Vermont MEDICAL CENTER

KREBS & LANSING CONSULTING ENGINEERS
164 Main Street, Suite 201
Colchester, Vermont 05446
P: (802) 878-0375
www.krebsandlansing.com

For Permit Review

NO.	DESCRIPTION	DATE

ESSEX PRIMARY CARE

LOT 2, ESSEX WAY

CONTENT:

CIVIL DETAILS

PROGRESS 3/7/22

16296-DVMMC-SX_PC-SHEETS-2022.dwg

DRAWN BY:	SLM
PROJECT NO:	16296
DATE:	3/1/22
REVISED:	
SCALE:	As Noted

CD-2

Construction Notes

1. The methods and materials of construction shall conform to the latest standards of the Municipality and the State of Vermont. All work shall be in conformance with all permits and approvals issued for the project. In case of conflict, the more stringent specification shall apply as directed by Engineer. All work shall be done in a workmanlike manner and completed in the time specified by Owner.
2. The Contractor shall be responsible for all work and materials shown and required to make the job complete. These drawings do not show every fitting or appurtenance. Materials shall be as specified on the drawings. Manufacturer's product specifications shall be submitted for all materials to the Engineer for approval prior to installation.
3. The location and size of existing underground utilities is not warranted to be exact or complete. The Contractor shall field locate all utilities and shall contact the affected utility company, the Engineer and the Town of Essex prior to making any hook ups. The Contractor shall be solely responsible for all existing utilities and their uninterrupted services. All off-site backfill, sheeting and shoring, dewatering, clearing and grubbing, erosion control, dust control, traffic control, grading, and all incidentals shall be included as part of the required work.
4. Repair of all disturbed areas, grading, seeding, mulching, repair of roads and curbs, paving, and other incidentals are included as part of the required work. All disturbed areas shall be loamed and mulched until permanent ground cover is established.
5. The Contractor shall verify all horizontal control and temporary bench marks before use.
6. The workers and public shall be protected by the Contractor from any and all hazards connected with the construction work. Open trenches, materials, or equipment within the working limits are to be guarded by the use of adequate barricades or flaggers. All barricades left in position overnight are to be properly lighted. Kerosene pots are not acceptable. When work narrows the usable pavement, flaggers shall be employed to aid the flow of traffic so that there will be no undue delays. The Contractor shall be held responsible for the safety of all workers and the general public and all damages to property occurring from or upon the work occasioned by negligence or shall be held responsible for the safety of all workers and the general public and all damages to property occurring from or upon the work occasioned by negligence or day or night within the working area. All work shall be in conformance to OSHA regulations, Title 19, Parts 1926.651 and 1926.652, and applicable to VOSHA regulations.
7. Contractor shall contact Dig Safe or other non-member utilities prior to any excavation.
8. All new storm and sanitary extending from structures shall be laid with a pipe laser to elevation and slope as shown on the plans.
9. The Contractor shall sawcut all existing pavement to be removed. The Contractor shall minimize the pavement area disturbance. Contractor shall be responsible for all pavement repair and restoration necessary to complete the work.
10. The Contractor shall be responsible for all construction layout.
11. Temporary silt fence shall be erected prior to any clearing or construction. Fencing may be erected in phases, but in no case shall construction of clearing proceed fencing. Special areas may be designated by the Owner for preservation of existing trees. These areas shall be the Contractor's responsibility to insure no damage is done to designated trees.
12. Existing plantings are located in general areas as shown on the plans. Contractor shall protect plantings scheduled to remain so as not to damage these or their root systems.
13. Contractor shall comply with all permits and approvals issued for this project.
14. Contractor shall sign on as the Co-Permittee for the State of Vermont Erosion Prevention and Sediment Control permit for the project.
15. Slope stability upon unsaturated soil conditions. If during construction saturated soils are encountered, contact the Engineer immediately.

Straw wattles may be used as as substitute for silt fence for small drainage areas with prior approval from the Engineer.

NOTE:

1. ***Contractor shall be responsible for the installation, maintenance, and removal of silt fence in all locations shown on the plans.***
2. ***Maintenance shall be performed as needed and material removed when sediment reaches half of fabric height. Remove silt fence after successful establishment of vegetation.***

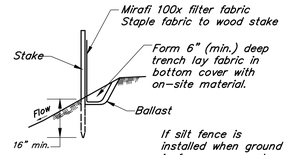

Section A-A

If silt fence is installed when ground is frozen, a gravel or sand ballast must be used.

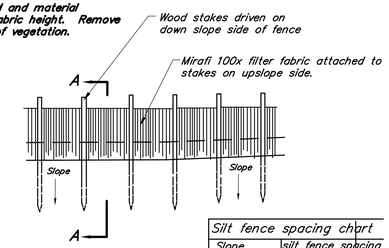

Silt fence spacing chart	
Slope	silt fence spacing
5% to 10%	50 ft. or less
10% to 20%	25 ft. or less
> 20%	15 ft. or less

Typical Temporary Silt Fence

N.T.S.

North American Green S75BN

Material Content

Straw	100% (.50 lbs/sq.yd.) (.27 kg/m2)
Netting	Leno woven, 100% biodegradable jute fiber
Weight	approximately 1.64 lbs/1000 s.f.
Thread	Biodegradable

Installed as per manufacturer's specifications.

Material Specifications

Erosion control blanket shall be a machine-produced mat of 100% agricultural straw.

The blanket shall be of consistent thickness with the straw evenly distributed over the entire area of the mat. The blanket shall be covered on the top side with natural fiber netting having an approximate 1/2" X 1/2" mesh and be sewn together with biodegradable thread.

Straw erosion control blanket shall be S75BN as manufactured by North American Green, Inc. (812-867-6632) or equivalent. Erosion control blanket shall have the following properties:

Erosion Control Matting

NOTES:

1. Contractor shall be responsible for the installation, maintenance, and removal of straw wattles in all locations shown on the plans.
2. Maintenance shall be performed as needed and material removed when sediment reaches half of product height. Remove wattle after successful establishment of vegetation.

Wattle spacing chart	
Slope Gradient (H:V)	Wattle spacing
< 6:1	50 ft. or less
4:1 – 6:1	35 ft. or less
> 4:1 – 2:1	20 ft. or less
> 2:1 – 1:1	10 ft. or less
> 1:1	5 ft. or less

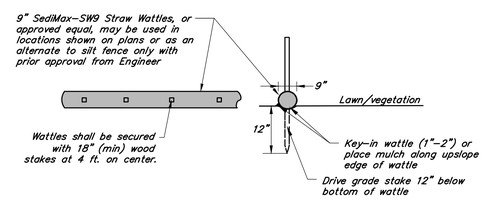

Typical Straw Wattle Sediment Control

N.T.S.

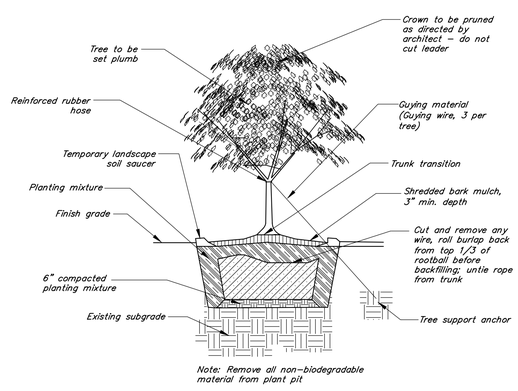

Note: Remove all non-biodegradable material from plant pit

Tree Planting in Landscape Detail

N.T.S.

Erosion Prevention and Sediment Control Notes

1. Contractor shall be responsible for complying with all State and Local erosion prevention and sediment control standards and permit requirements during construction.
2. The limit of disturbance shall be clearly defined by Contractor's surveyor prior to clearing. Erosion and sediment control devices shall be established to trap sediment on site.
3. All erosion control shall be placed as shown on the drawings or as ordered by the Engineer The Contractor shall maintain the erosion control measures until the Engineer is satisfied that permanent ground cover is established and that further measures are not required. It shall be the responsibility of the Contractor to employ appropriate erosion control as shown on these drawings and any other measures as necessary to trap sediment on site.
4. All areas of disturbance shall be permanently or temporarily stabilized as soon as possible and within 48 hours of final grading. All areas of disturbance shall be at least temporarily stabilized within 14 days of initial disturbance. Any disturbance after 14 consecutive days of exposed soil shall be stabilized daily unless the following exceptions apply:
   1. Stabilization is not required if earthwork is to continue in the area in the next 24 hours and there is no precipitation forecast in the next 24 hours.
   2. Stabilization is not required if the work is occurring in a self-contained excavation (i.e. no outlet) with a depth of 2 ft. or greater (e.g. house foundation excavation, utility trenches). Stabilization measures shall include mulch and netting, erosion control matting, crushed stone, gravel, or pavement.
5. Refer to the Low Risk Site Handbook for Erosion Prevention and Sediment Control for acceptable methods of stabilization.
6. The Contractor shall use water for dust control.
7. The Contractor shall provide inlet protection around all catch basins (existing or new) that collect construction site stormwater runoff. Crushed stone inlet protection may be used in non-paved areas.
8. A stabilized construction entrance (See Detail) shall be installed and maintained at all construction access locations. Contractor shall be responsible for installing crushed stone to provide stable areas for construction vehicle traffic, staging, and storage. The Contractor is responsible for providing and maintaining sufficient stone to prevent rutting and sediment tracking.
9. All paved roads used by construction vehicles shall be swept daily during periods of active construction, or at a greater frequency, if dirt or gravel is tracked from the site. The swept debris shall be immediately removed from the curb face if applicable.
10. All temporary erosion and sediment control measures shall be removed within 30 days after final stabilization or after the measures are no longer needed, unless otherwise authorized.
11. All sediment removed from sediment control practices shall be placed in an approved soil disposal area.
12. All areas that do not have established vegetation by October 15th must be stabilized in accordance with the Winter Construction Requirements listed on this sheet.
13. After permanent seeding the Contractor shall be responsible for watering, if necessary, to ensure adequate vegetative growth.
14. Water from dewatering activities that flows off site must be clear. Water must not be pumped into storms sewers, lakes, or wetlands unless the water is clear.
15. The Contractor shall be responsible for all inspection and maintenance of the erosion prevention and sediment control practices for the project. Inspections and corresponding reports shall be performed at a minimum, once a week and after every precipitation event that results in a discharge from the site.

    The perimeter of the site and all BMPs will be inspected at the **end of each workday** to ensure that sediment will not leave the site. If sediment has traveled beyond the site boundary, it shall be swept up or otherwise removed and deposited on-site in an upgradient area at the **end of each workday.**

SEEDING SPECIFICATIONS

PERMANENT SEED MIX SHALL BE USED AS EARLY AS PRACTICABLE BETWEEN 5/15 AND 9/15 AND SHALL MEET THE FOLLOWING CRITERIA:

SEED	%
WEIGHT	
CREEPING RED FESCUE	40%
KENTUCKY BLUEGRASS	30%
PERRENNIAL RYEGRASS	30%

If hydroseeding is used for temporary stabilization measures for turf establishment. Specifications are:

Hydroseed Additives:
Fertilizer: 19-19-19 75 lbs per 1,000 gallons of water
Lime: 100 lbs. per 1,000 gallons of water
Mulch: 300 lbs. per 1,000 gallons of water.
Tacifer: 5 lbs. per 1,000 gallons of water.

1. Areas having soil compaction as a result of construction shall have any crushed stone removed and the subgrade shall be roto-tilled prior to placing topsoil. Refer to the Post Construction Soil Depth and Quality Requirements.
2. If hand seeding, only straw mulch is to be used and secured by netting either organic or inorganic. If inorganic is used, it must be removed before the first mowing.
3. Starter fertilizer shall be applied at the manufacturer's suggested rate at the time of seeding. Fertilizer application will not be allowed in sensitive areas and adjacent to drainage ways as determined by the Engineer.
4. Watering is to be done by the Contractor and is to last for the duration of the warranty period to maintain proper growth. All apparatus necessary to apply the water must be furnished by the Contractor (i.e. hoses, sprinklers, etc.).
5. Staking of all topsoiled areas to control foot traffic will be required. Unless otherwise specified, acceptable staking materials will be grade stakes and twine or string with flagging attached for visibility.
6. A guarantee through the first mowing is required with any sparse or bare areas larger than 1 sq. ft. to be redone.
7. The Contractor is responsible for the first mowing. After the first mowing and prior to the Owner taking responsibility for the lawn areas the Contractor and an Owner's Representative shall meet to inspect the vegetation establishment.
8. Contractor is responsible for all topsoil to complete the project as shown. If existing volume of topsoil is inadequate, the Contractor, at no cost to the Owner, shall purchase offsite approved topsoil as necessary.

THE University of Vermont MEDICAL CENTER

KREBS & LANSING CONSULTING ENGINEERS
164 Main Street, Suite 201
Colchester, Vermont 05446
P: (802) 878-0375
www.krebsandlansing.com

For Permit Review

NO.	DESCRIPTION	DATE

ESSEX PRIMARY CARE

LOT 2, ESSEX WAY

CONTENT:

CIVIL DETAILS

PROGRESS 3/7/22

16296-UVMMC-ESX_PC-SITE-2022.dwg

DRAWN BY:	SLM
PROJECT NO:	16296
DATE:	3/1/22
REVISED:	
SCALE:	As Noted

CD-3

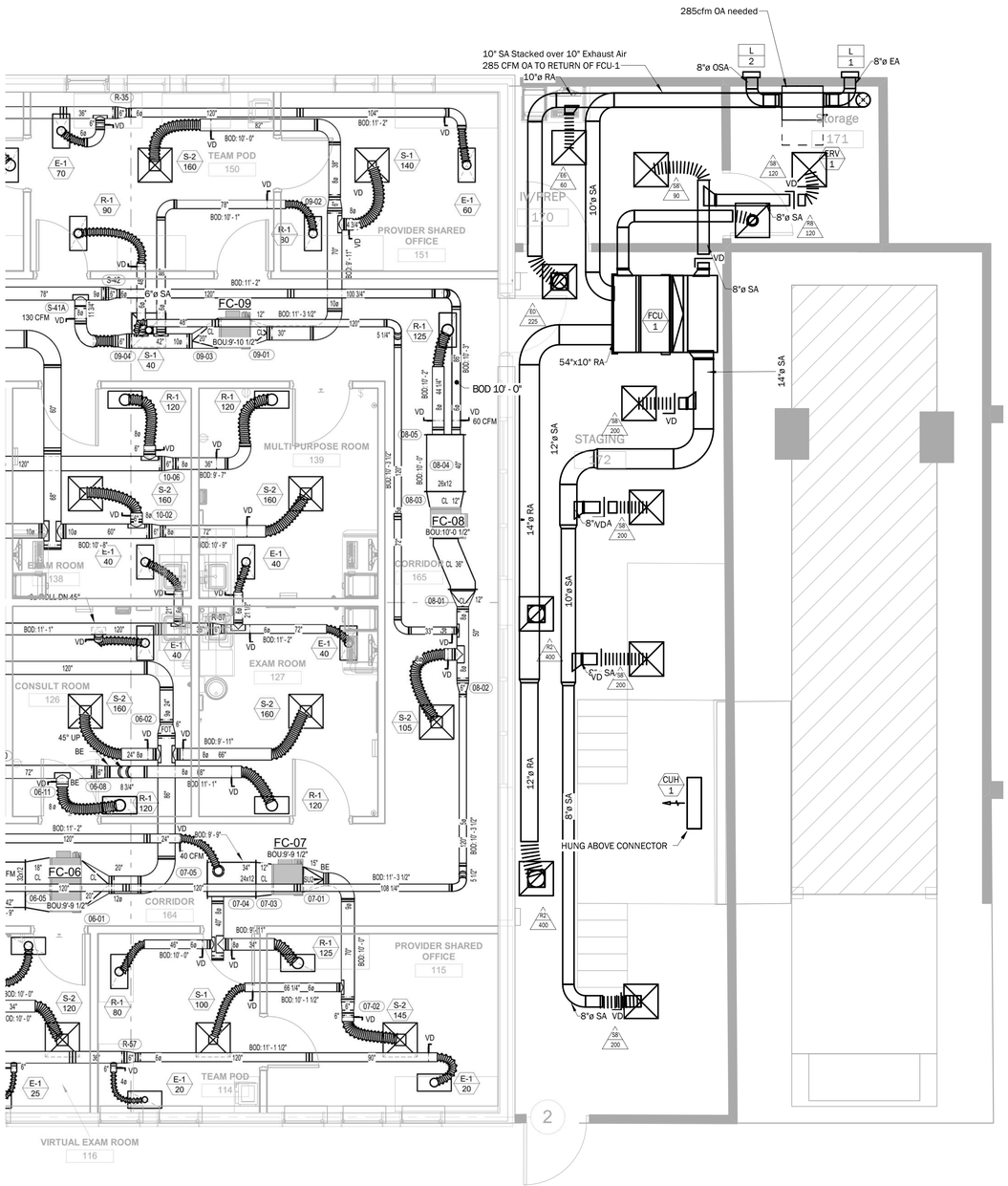

1 M-100 Mechanical Ductwork Plan
1/4" = 1'-0"

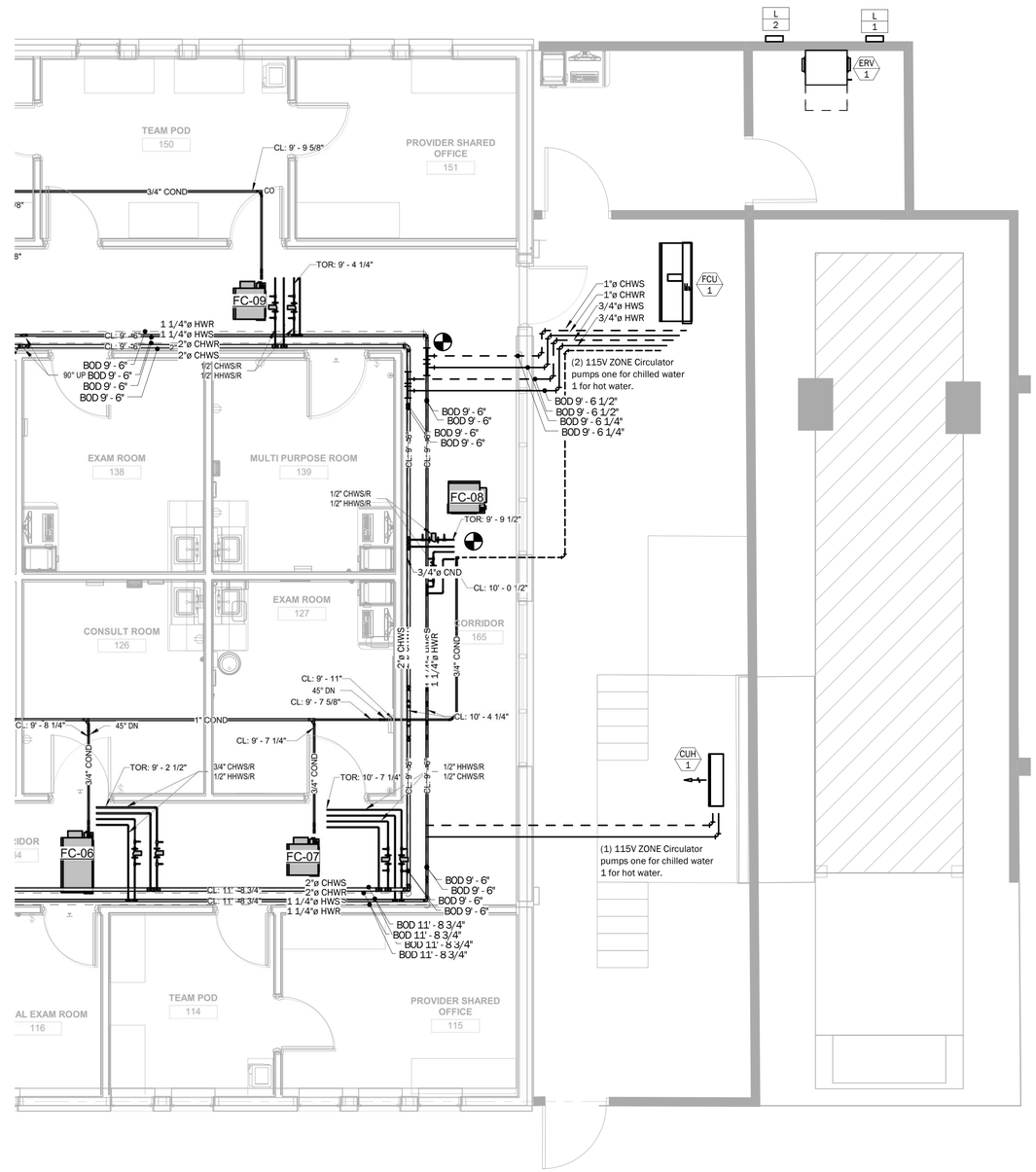

2 M-100 Mechanical Piping Plan
1/4" = 1'-0"

2022-4-18 FOR OWNER REVIEW AND COMMENT

No.	Description	Date

VERMONT MECHANICAL INCORPORATED
PO BOX 728, WILLISTON, VT 05495
PH: 802-862-5900 F: 802-862-2219
WWW.VTMECHANICAL.COM

UVMMC Essex Primary Care Mobile MRI Trailer Addition
2 Essex Way
Essex Junction, VT 05452

DRAWING TITLE: Mechanical Ductwork & Piping Plans

VMI JOB:	UVMCFP
DRAWN BY:	LJS
CHECKED BY:	WEA
DATE:	2014-01-01
DWG NO.	M-100

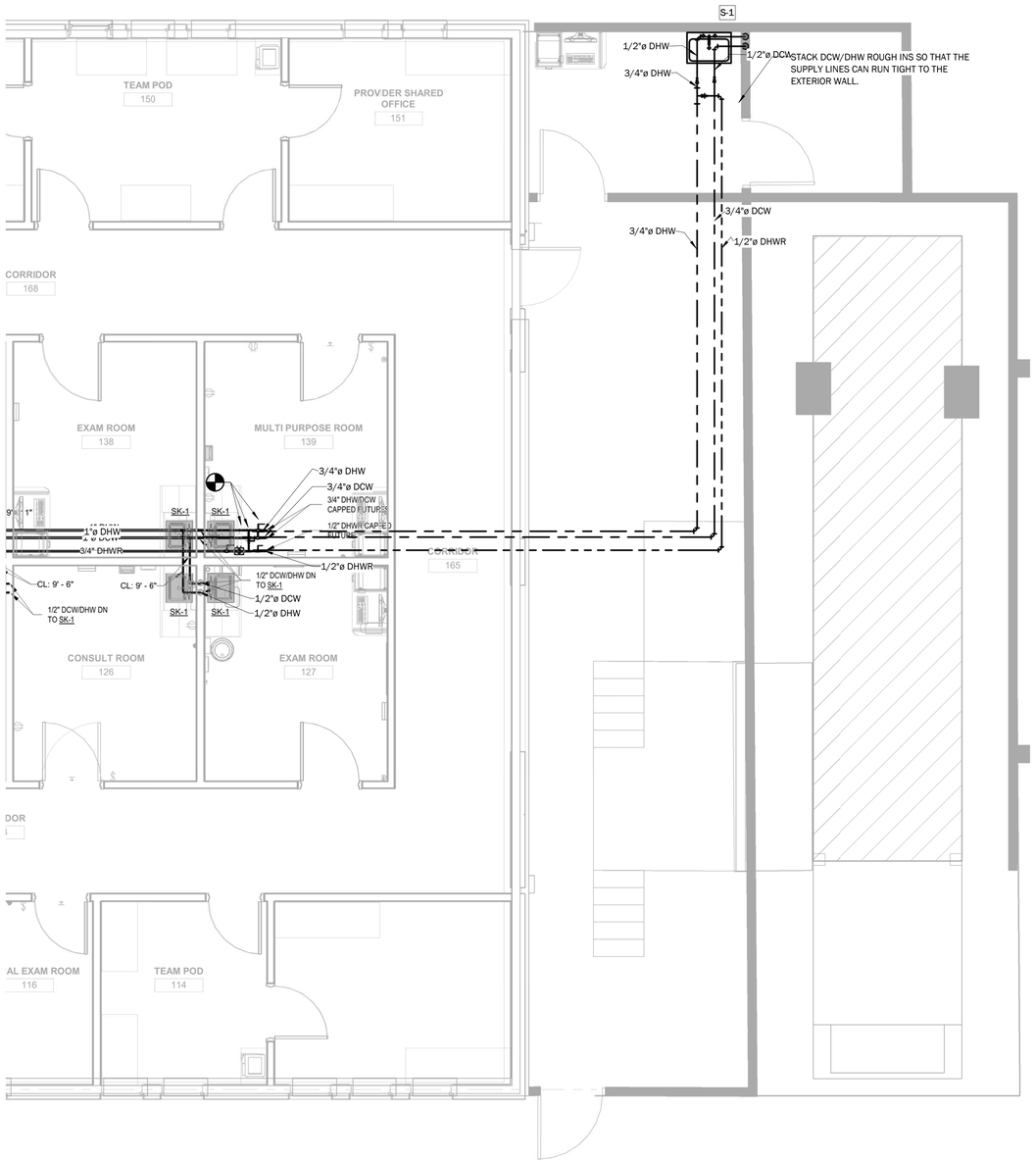

1 PS-1A
P-100 1/4" = 1'-0"

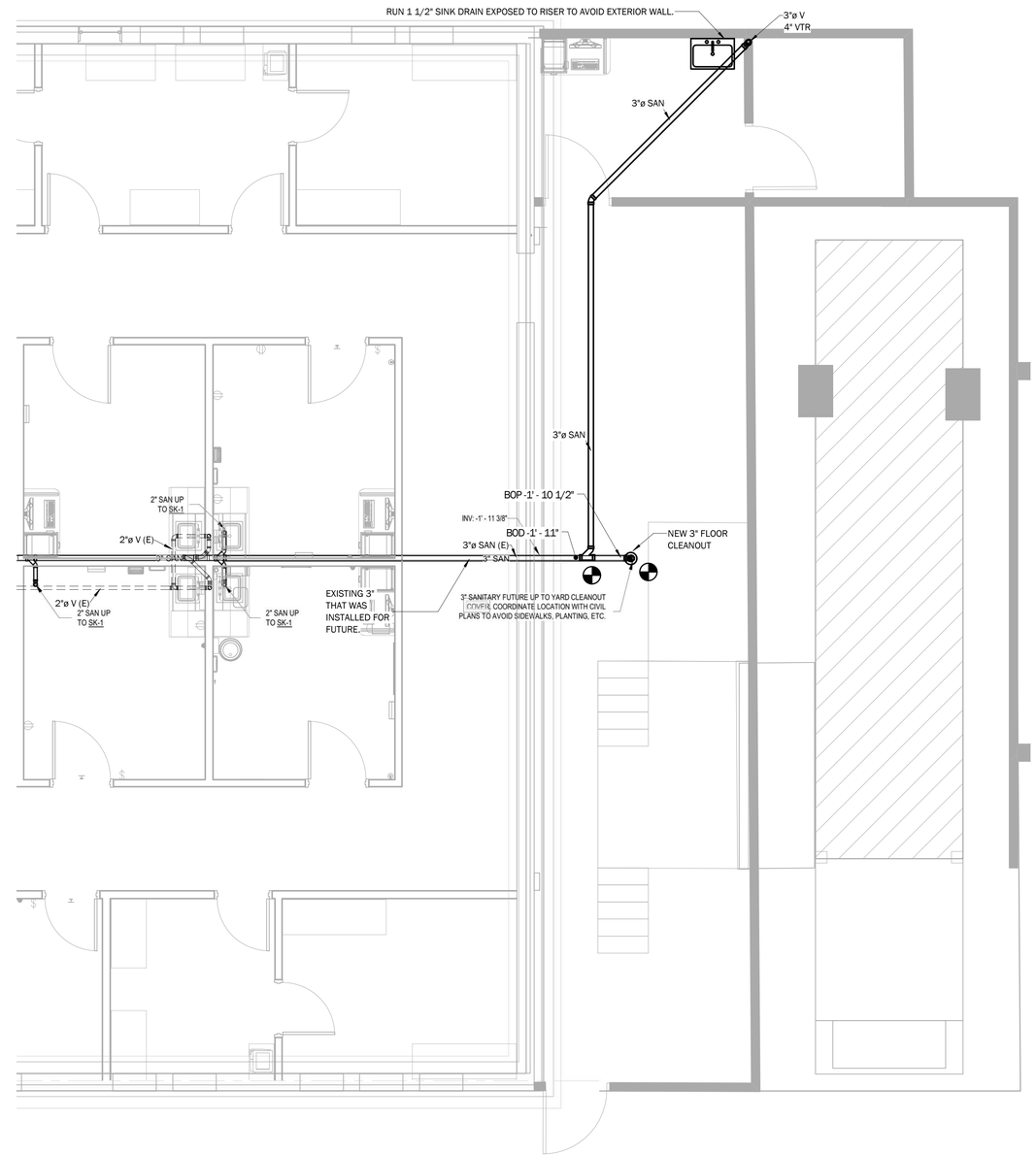

2 PW-1A
P-100 1/4" = 1'-0"

2022-4-18 PROGRESS FOR OWNER REVIEW AND COMMENT

No.	Description	Date

VERMONT MECHANICAL INCORPORATED
PO BOX 728, WILLISTON, VT 05495
PH: 802-862-5900 F: 802-862-2219
WWW.VTMECHANICAL.COM

UVMMC Essex Primary Care Mobile MRI Trailer Addition
2 Essex Way
Essex Junction, VT 05452

DRAWING TITLE: Plumbing Supply & Waste Plan

VMI JOB:	UVMCFP
DRAWN BY:	LJS
CHECKED BY:	WEA
DATE:	2014-01-01
DWG NO.	P-100

Energy Recovery Unit Schedule

Notes	Description	Manufacturer	Model	Location	Ventilation Type	Summer									Winter							Fan Data			Electrical Data						Weight (lbs)	Notes
						Capacity (mbh)		Air Data					Effectiveness (%)		Capacity (mbh)		Air Data					Flow (cfm)	ESP (in wg)	RPM	HP	Voltage (v)	Phase	FLA (a)	MCA (a)	MOCP (a)		
						Sensible	Total	EAT DB (°F)	EAT WB (°F)	LAT (°F)	LAT WB (°F)	Pressure Drop (in wg)	Sensible	Total	Sensible	Total	EAT DB (°F)	EAT WB (°F)	LAB DB (°F)	LAB WB (°F)	Pressure Drop (in wg)											
ERV-1	Energy Recovery Unit	RenewAire	EV300	STORAGE	Static Plate, heat and humidity transfer	949	3277	88	71	78.5	66.5	.7	73	55.4	6354	8492	-17	-18	46.5	36.2	.7	250	.7	1750	.2	120	1	3.3	10	15	72	1" Merv 8 filters

Cabinet Unit Heater Schedule

Tag	Description	Manufacturer	Model	Service	Location	EAT (°F)	LAT (°F)	EWT	LWT	MBH	Electrical Data Voltage (v)	Phase	HP	Notes
CUH-1	Cabinet Unit Heater	Beacon Morris	RC-1200-04	Open Area	Ceiling mount	65	85	160	140		120	1	1/10	

4 Pipe Fan Coil Unit Schedule

Tag	Description	Manufacturer	Model	Supply Fan		Coil Data										Electrical Data					Weight (lbs)	Notes
				Flow (cfm)	ESP	Heating					Cooling					Voltage (v)	Phase	FLA (a)	MCA (a)	MOCP (a)		
						EAT	L...	EWT	LWT	GPM	WPD	EAT DB...	LAT DB...	GPM	WPD	Capacity (T...								
FCU-1	Fan Coil...	Daikin	FCHH210	1000	.3	55	95	160	140	-	-	75	55				208	1			15		

Mechanical Pipe Insulation Schedule (VT)

System	Operating Temperature (°F)	Insulation		Material	Pipe Size							Notes
		Conductivity (btu-in/hr-sf-°F)	Mean Temp (°F)		1/2"	3/4"	1"	1 1/4"	1 1/2"	2"	3"	
Hydronic Heating	141-200	0.25-0.29	125	Fiberglass	1.5	1.5	1.5	1.5	2.0	2.0	2.0	
Chilled Water Cooling	40-60	0.21-0.27	75	Fiberglass	0.5	0.5	0.5	0.5	1.0	1.0	1.0	

Notes
1. To be updated to match 2020 Energy Code Requirements
2. Only new piping will be updated.

Mechanical Pipe Type Schedule

System	Temp (°F)	Material		Joint Type	Hanger Type		Hanger Spacing Max				Notes
		Pipe	Fittings		Suspended	Supported	Horizontal	Vertical	Shields	Inserts	
Hydronic Hot Water	< 180	Type M Copper		Soldered of Press	Clevis or Loop	Trapeze	8	10			
Chilled Water	40 - 55	Type M Copper		Soldered of Press	Clevis or Loop	Trapeze	8	10			
Condensate	75	Type M Copper		Soldered or Press	Clevis or Loop	Trapeze	8	10			

Plumbing Pipe Type Schedule

System	Temp (°F)	Material		Joint Type	Hanger Type		Hanger Spacing Max				Insulation	Notes
		Pipe	Fittings		Suspended	Supported	Horizontal	Vertical	Shields	Inserts		
Domestic Hot Water	110	Type-L	Wrought/Propress	Solder/Propress	Clevis	–	8	10	–	–	See Schedule	
Domestic Cold Water	50	Type-L	Wrought/Propress	Solder/Propress	Clevis	–	8	10	–	–	See Schedule	
Above Ground Sanitary, Vent, & Storm ≤ 8"	80-100	Schedule 40 PVC	Schedule 40 PVC	Solvent Welded Socket	Clevis	–	–	–	–	–	See Schedule	
Below Ground Sanitary, Vent, & Storm ≤ 8"	80-100	Schedule 40 BI	150 lb Class	Hubless	Clevis	–	–	–	–	–	See Schedule	1
Exposed Sanitary, Vent, & Storm ≤ 8"	80-100	Schedule 40 PVC	Schedule 40 PVC	Solvent Welded Socket	Clevis	–	8	10	–	–	See Schedule	

Notes
1. Provide when pipe is less tha 8'-0" AFF

Domestic Piping Insulation Schedule

System	Operating Temperature (°F)	Insulation Conductivity (btu-in/hr-sf-°F)	Material	Pipe Size						Notes
				1/2"	3/4"	1"	1 1/4"	1 1/2"	2"	
Domestic Cold Water Supply	46-70	0.21-0.27		0.5	0.5	0.5	0.5	1.0	1.0	
Domestic Hot Water Supply, Return	105-140	0.21-0.28		1.0	1.0	1.0	1.0	1.5	1.5	

Duct Type Schedule

System	Temp (°F)	Material	Leakage Class	Pressure Class	Seal Class	Hanger Type		Joint Type		Notes
						Suspended	Supported	Longitudinal	Transverse	
Rectangular Supply	55-105	Galvanized	24	+2" WC	C	Band or...	Unistrut Frame	Pittsburg	TDF	
Round Supply	55-105	Galvanized	12	+2" WC	C	Band or...	Unistrut Frame	Spiral	Coupling	
Rectangular Return	75	Galvanized	24	-2" WC	C	Band or...	Unistrut Frame	Pittsburg	TDF	
Round Return	75	Galvanized	12	-2" WC	c	Band or...	Unistrut Frame	Spiral	Coupling	

Notes
1. Fittings to be fabricated per the latest SMACNA "HVAC Construction Standards".
2. Fittings to be fabricated per the latest SMACA "Round Industrial Duct Construction Standards" section 15.4.
3. Sealer shall be as indicated in the HVAC specifications and notes.
4. Insulate exhaust ductwork from building penetration to 10'-0" inside building.
5. All supply air flex duct shall be thermally insulated with an insualting R-value of 8.0

Design Data Schedule

Design Location	Summer				Winter				Notes
	Outisde		Inside		Outside		Inside		
	DB (°F)	WB (°F)	DB (°F)	RH (%)	DB (°F)	WB (°F)	DB (°F)	RH (%)	
Burlington, VT	89	71	70	50	-7	NA	68	70	

Notes
1. 99.6% heating and cooling conditions used

Pump Schedule

Tag	Description	Manufacturer/M...	GPM	HEAD/FT	HP	VOLTAGE/PHASE	Notes
HP-1	CIRCULATO...	TACO 008 IFC	FINAL TBD	10	1/25	120/1	Standard Construction, 1" Flange, 120v MOD
HP-2	CIRCULATOR PUMP	TACO 008 IFC	FINAL TBD	10	1/25	120/1	
CHP-1	CIRCULATO...	TACO 008 IFC	FINAL TBD	10	1/25	120/1	
CP-1	CONDENSATE PUMP	LITTLE GIANT VCMA-15ULS	65 GPH	5	1/50	120/1	

Register, Grille, & Diffuser Schedule

Tag	Manufacturer	Model	Description	Service	Neck Size (in)	Face Size (in)	Notes
E6	Price	80	EGG CRATE	EXHAUST	6	24x24	FABRICATED PLENUM WITH
E0	Price	80	EGG CRATE	EXHAUST	10	24x24	FABRICATED PLENUM WITH
R8	Price	80	EGG CRATE	RETURN	8	24x24	FABRICATED PLENUM WITH
R0	Price	80	EGG CRATE	RETURN	12	24x24	FABRICATED PLENUM WITH
S8	Price	ASCD-31	4 WAY BLOW DIFFUSER	SUPPLY	8	24x24	WHITE ALUMINUM LAYIN

Louver Schedule

Tag	Description	Manufacturer	Model	Quantity	Size (in)	Extended Sills (y/n)	Insect Screen (y/n)	Bird Screen (y/n)	Finish	Notes
L-1	Exhaust	Buckley	EAL4	1	12x18	n	y	y	Mill	Standard Construction, 1" Flange, 120v MOD
L-2	Intake	Buckley	EAL4	1	12x18	n	y	y	Mill	Standard Construction, 1" Flange, 120v MOD

Duct Insulation Schedule (VT)

System	Location	Operating Temperature (°F)	R-Value	Notes
Supply Ductwork	Within the Building Envelope	55-95	R-6	1.5" Duct Wrap
Supply Ductwork	Outside the Building Envelope	50-65	R-12	Board insulation with Alumiguard weather wrapping
Return Duct	Outside the Building Envelope and Inside the Envelope within 10' of the Exterior Penetration	68-74	R-12	Board insulation with Alumiguard weather wrapping
Return Duct	Within the builiding Envelope but within 10' of the Exterior Penetration	68-74	R-8	1.5" Duct Wrap
Exhaust Duct	Inside the Envelope within 10' of the Exterior Penetration	68-74	R-8	

Notes
1. Unconditioned Spaces within the insulated building envelope, eg within ceiling assemblies
2. Exposed within heated and air conditioned spaces
3. Outside the building insulated space but within the building enclosure, eg uninsulated attics
4. Outside of building
5. All values and references are from 2020 VT Energy Code
6. Supply duct withing ceiling plenums is not explicitly required by the code. However, because plenum Temperature is not actively controlled condensation could occur if it is uninsulated. Insulate conceled supply or outside air duct that handles air below 70 F with minimum R-6 insulation.
7. All ductwork connected to an exterior louver/plenum or fan shall be insulated for 10 feet into the building with a minimum of R-6, unless otherwise noted.
8. All insulation installed for exterior ductwork shall include a sealed waterproof jacket.
Exceptions: Where located within equipment or otherwise noted on the drawings.

Plumbing Fixture Schedule

Tag	Description	Manufacturer	Model	Connection (in)				Notes
				Cold Water	Hot Water	Waste	Vent	
no	Hose Bib	Woodford	122	1/2	1/2	–	–	
S-1	SS Hand Wash Sink	Elkay	LRAD191955	1/2	1/2	1 1/2	1 1/2	Chicago 786ABCP Wrist Blade Faucet, pair with TMV-1 mixing valve
no	Floor Drain							
FCO-1	Floor Clean Out							

NOT FOR CONSTRUCTION

No.	Description	Date

VERMONT MECHANICAL INCORPORATED
PO BOX 728, WILLISTON, VT 05495
PH: 802-862-5900 F: 802-862-2219
WWW.VTMECHANICAL.COM

UVMMC Essex Primary Care Mobile MRI Trailer Addition
2 Essex Way
Essex Junction, VT 05452

DRAWING TITLE: Schedules & Details

VMI JOB:	UVMCFP
DRAWN BY:	LJS
CHECKED BY:	WEA
DATE:	2014-01-01
DWG NO.	M-600

Exhibit 5
Price Quote

PHILIPS HEALTHCARE
A division of Philips North America LLC
414 Union St, 2nd Floor
Nashville, TN 37219

PHILIPS

Quotation #: 1-2NGC2G6	**Rev:** 2	**Effective From:** 29-Dec-21	**To:** 31-Dec-21

Presented To:

UNIVERSITY OF VERMONT MEDICAL CENTER
111 COLCHESTER AVE
BURLINGTON, VT 05401-1416

Tel:

Alternate Address:

Presented By:

David Delworth
Account Manager
Tel: (508) 320-2705
Fax:

Laura Costello
Regional Manager
Tel:
Fax:

Date Printed: 29-Dec-21

The Service information contained in this Quote is subject to a separate service proposal.

The Lease Information contained in this Quote is subject to a separate leasing proposal.

This quotation contains confidential and proprietary information of Philips Healthcare, a division of Philips North America LLC ("Philips") and is intended for use only by the customer whose name appears on this quotation. It may not be disclosed to third parties without the prior written consent of Philips.

IMPORTANT NOTICE: Health care providers are reminded that if the transactions herein include or involve a loan or discount (including a rebate or other price reduction), they must fully and accurately report such loan or discount on cost reports or other applicable reports or claims for payment submitted under any federal or state health care program, including but not limited to Medicare and Medicaid, such as may be required by state or federal law, including but not limited to 42 CFR 1001.952(h).

Quote Solution Summary

Line #	Product	Qty	Price
	100040 Spectral CT	1	$1,845,228.00
	100861 ISP - CT Clinical Apps	1	$20,000.00
		Equipment Total:	$1,865,228.00

Solution Summary Detail

Product	Qty	Each	Monthly	Price
100040 Spectral CT	1	$1,845,228.00		$1,845,228.00
60 Month Equipment + Service Lease Fair Market Value	60		$47,814.44	

The Lease Information contained in this Quote is subject to a separate leasing proposal. If the trade-in equipment is leased with Philips Medical Capital, then the monthly payment does not apply.

SVC0130 Protection POS $9,081.73

The Service information contained in this Quote is subject to a separate service proposal.

Buying Group: **UNIVERSITY OF VERMONT HEALTH NETWORK** **Contract #:** **SBA11583M and LSP000030**

Addt'l Terms: **The specific Contract # referenced above represents the Novation or Vizient agreement with Philips containing discounts, fees and any specific terms and conditions, including the Vendor's Terms and Conditions of Sale (subject to such Contract), applicable to the purchase of any Product identified as part of this quoted Solution.**

Each Quotation solution will reference a specific Buying Group/Contract Number representing an agreement containing discounts, fees and any specific terms and conditions which will apply to that single quoted solution. If no Buying Group/Contract Number is shown, Philips' Terms and Conditions of Sale will apply to the quoted solution.

Each equipment system listed on purchase order/orders represents a separate and distinct financial transaction. We understand and agree that each transaction is to be individually billed and paid.

Payment Terms: 0% Down, 80% Upon Delivery, 20% Due When the Product is Available for First Patient Use, Net due 30 days from date of invoice

100861 ISP - CT Clinical Apps 1 $20,000.00 $20,000.00

Buying Group: **UNIVERSITY OF VERMONT HEALTH NETWORK** **Contract #:** **SBA11583M and LSP000030**

Addt'l Terms: **The specific Contract # referenced above represents the Novation or Vizient agreement with Philips containing discounts, fees and any specific terms and conditions, including the Vendor's Terms and Conditions of Sale (subject to such Contract), applicable to the purchase of any Product identified as part of this quoted Solution.**

Each Quotation solution will reference a specific Buying Group/Contract Number representing an agreement containing discounts, fees and any specific terms and conditions which will apply to that single quoted solution. If no Buying Group/Contract Number is shown, Philips' Terms and Conditions of Sale will apply to the quoted solution.

Each equipment system listed on purchase order/orders represents a separate and distinct financial transaction. We understand and agree that each transaction is to be individually billed and paid.

Payment Terms: 0% Down, 80% Upon Delivery, 20% Due When the Product is Available for First Patient Use, Net due 30 days from date of invoice

Quote Summary

100040 Spectral CT

Qty	Product
1	NNAC684 Spectral CT 7500 Premium
1	FNA1196 Spectral CT Education Package New Philips Customer
1	NCTA485 Keyboard Language - English
1	NCTD780 Spectral Electron Density
1	NCTD945 Replace Philips CT
1	FCT0420 Oper Manual - English (US)
1	NCTE021 High performance patient table
1	NCTE396 COMPRESSOR KIT 50/60 HZ
1	NNAC407 IQon ISP Entitlement
1	SP059B Universal Power Supply
1	SP019 Trade in Allowance

Quote Summary

100861 ISP - CT Clinical Apps

Qty	Product
1	NICA798 Virtual Solution (VM based)
1	NICB420 CT Spectral Standard
1	NICB422 CT Spectral Tumor Track
1	NICB424 CT Spectral CCA
1	NICB426 CT Spectral AVA

100040 Spectral CT

System Type: New
Freight Terms: FOB Destination
Warranty Terms: Part numbers beginning with two (2) asterisks (**) are covered by a System 12 Months Warranty. All other part numbers are third (3rd) party items.

Special Notations: Contingencies must be removed 120 days before scheduled shipment to assure delivery on specified date.
Any rigging costs are the responsibility of the Purchaser.

Additional Terms: The specific Contract # referenced above represents the Novation or Vizient agreement with Philips containing discounts, fees and any specific terms and conditions, including the Vendor's Terms and Conditions of Sale (subject to such

Line #	Part #	Description	Qty	Each	Price
1	**NNAC684	Spectral CT 7500 Premium	1	$1,845,876.28	$1,845,876.28

Spectral CT 7500 Premium

It's not just a CT, it's spectral-detector CT. Philips Spectral CT 7500 offers diagnostic certainty through a single scan that provides conventional and spectral data for every patient, every time, without increase in radiation dose. Spectral CT 7500 builds on the proven benefits of spectral diagnostics in oncology, bringing confidence to challenging exams in emergency and cardiology departments. Because it's 100% spectral, 100% of the time, results are always available on demand, even retrospectively. This is especially helpful in cases with sub-optimal injection and incidental findings. The spectral layers of information improve tissue characterization and visualization, which reduces the need for follow-up exams.

Philips Spectral CT 7500 Premium allows for:

- Fast spectral acquisitions and reconstructions making Spectral CT 7500 the fastest spectral detector scanner. The fast acquisitions are enabled by the 8cm spectral detector and the high- speed patient table that enables high-pitch imaging. The spectral reconstructions are up to 45% faster than on the predicate device- the IQon Spectral CT

- Enhanced throughput capabilities can be realized by utilizing the Workflow Boost spectral reconstruction, with up to 35% faster spectral results creation of selected trauma, emergency and cardiovascular exams.

- Every scan is spectral, without any special scan protocols or acquisition modes

- Spectral imaging benefits without complexity, operated via the easy to use iPatient interface

- Spectral scans and results available for every patient from pediatric to bariatric

- On-demand retrospective data analysis from your PACS environment or IntelliSpace Portal, with your traditional workflow
- Improved patient experience with a wide 80 cm bore and a new table designed for patient comfort

- Improved staff experience with easy access to the patients, especially needed in the emergency setting or during interventional procedures

- Continuous monitoring of system performance via integrated serviceability innovations, including sensors and smart analytics

Philips Spectral CT 7500 is built from the ground up for fast spectral imaging. Key features include:

100040 Spectral CT					
Line #	**Part #**	**Description**	**Qty**	**Each**	**Price**

Performance

- Fast scans and reconstructions
- Workflow boost spectral reconstruction
- On-Demand Prospective and/or Retrospective Spectral Results
- Spectral results from 100kVp, 120kVp and 140kVp scans
- Dose tools
- DoseRight Package
- IMR
- iDose4

Key clinical features

- Spectral Cardiac Plus Toolkit
- Spectral Cardiac Premium
- Spectral Neuro Essentials
- Gantry design
- 80 mm z-axis spectral coverage
- 80 cm bore
- AirGlide Gantry
- 0.27 second rotation time- provides outstanding temporal resolution in advanced clinical applications such as coronary artery imaging, cardiac perfusion and other high-speed, motion-free imaging.
- iMRC x-ray Tube with 120 kW generator
- mA range: 10-1000 mA
- kVp stations: 80, 100, 120, 140 kVp tube voltages
- Spectral kVp stations: 100,120 and 140 – Spectral results are available from any of these scans

New Patient table

Line #	Part #	Description	Qty	Each	Price

- Patient loads of up to 307 kg (677 lbs)
- 2m scan range
- Up to 600mm/sec
- 430 mm vertical height- Wheelchair height

Console

- iPatient S- Win10 and cyber-security enhancements
- Operator console with dual monitor configuration
- Console UPS

See Philips Spectral CT 7500 product datasheet for more details.

Features

On-Demand Spectral Results

On demand retrospective spectral data analysis means that with the Philips Spectral CT 7500, spectral results are available from every exam, from routine abdomen scans to challenging cardiac scans. The results can be pre-set in the exam card, or retrospectively created post scan. Spectral results are available from any 100kVp, 120kVp and 140kVp scans, enabling spectral across a wide range of patient, from pediatric to bariatric.

Clinicians can access the spectral results anytime, and from anywhere. The images can be reviewed in any DICOM PACS viewer, or analyzed in the IntelliSpace Portal.

- MonoE: High monoE results reduce image artifacts, including beam hardening in myocardium cardiac scans. Combining high monoE with O-MAR significantly reduces metal artifacts. Low monoE results improve visualization of iodine-enhanced tissues, providing improved CNR when compared to low kVp. Spectral CT 7500 has largest range of monoE imaging (40-200 keV).

- Virtual non-contrast: Provides the Hounsfield Unit (HU) measurements from virtual non-contrast spectral results are comparable to true non-contrast scans for the majority of the organs, allowing VNC results to replace a true non-contrast scan. This result is created by removing the iodine component from the image.

- Iodine no Water: Allows for improved visualization of iodine enhanced tissues. This result provides accurate iodine quantification in mg/ml.

- Iodine Density: Allows for improved visualization of iodine-enhanced tissues. This result provides accurate iodine quantification in mg/ml.

- Z Effective: Can be used for characterization of different tissues for example renal calculi characterization, by generating a color map based on atomic number of tissues in the image.

- Uric acid: Has the potential to be used in gout diagnosis and kidney stone characterization.

- Contrast-Enhanced Structures: Contrast Enhanced Structures results have the potential to better visualize the vascular lumen. Enhances structures that contain iodinated contrast while removing bones and calcium.

- Iodine removed Image is generated to focus on non-enhanced structures while removing the enhanced structures. Depending on various factors, some of the enhanced structures can still appear in the image.

- Calcium Suppressed: Calcium suppressed images provide additional information to the clinician that may help in better assessment of intervertebral disc herniation, and the visualization of bone marrow involvement when bone fractures are present. In this image, voxels containing calcium are suppressed and replaced by virtual HU values as similar as possible to the expected HU without calcium contribution to the attenuation

*Note: The results can be created on the scanner as part of the Exam Card and/or in the Spectral CT viewer on the scanner. All the results except Calcium Suppressed and Electron Density can be created on demand on the IntelliSpace Portal v9 and above, using the SBI series. The ability to create Calcium Suppressed and Electron Density results on IntelliSpace Portal from SBI series, requires ISP v10 and above.

NanoPanel Prism Detector

Through the Philips detector-based spectral approach facilitated by advancements in materials science, this iconic technology allows for:

- Always spectral (On-demand Prospective and Retrospective Spectral Results)
- Simultaneous detection in both time and space
- Top scintillator thickness is optimized for energy separation and image noise
- Efficient scatter rejection with the use of 2D anti-scatter grid
- High light output at low energy
- Improved low dose performance versus the prior design

Lung Cancer Screening

100040 Spectral CT

Line #	Part #	Description	Qty	Each	Price

The system enables Low Dose CT Lung Cancer Screening Exam Cards that are compliant with ACR and CMS guidelines for LDCT LCS. These patient-specific low-dose CT lung cancer screening protocols leverage the advanced scanner capabilities such as iDose4, can increase early detection in high-risk patients and help prevent a substantial number of lung cancer related deaths*.

*The screening must be performed within the established inclusion criteria of programs/ protocols that have been approved and published by either a governmental body or professional medical society.

- Please refer to clinical literature, including the results of the National Lung Screening Trial (N Engl J Med 2011; 365:395-409) and subsequent literature, for further information.

iPatient S

Philips' iPatient S is an advanced platform that delivers focused innovations to facilitate patient-centered imaging, now and in the future. This powerful Windows® 10-based platform will put you in control of innovative solutions that drive confidence and consistency through personalized patient- centric workflow, increase the ability to do complex and advanced procedures with ease and efficiency. iPatient S removes unnecessary complexity and allows you to drive confidence and consistency 24/7, and prepares for future innovations that will help improve the care being delivered to the patient. iPatient S includes a state-of-the-art cybersecurity design.

Note: Windows is a registered trademark of Microsoft Corporation in the United States and other countries.

ExamCards

ExamCards are the evolution of the scanning protocol. With ExamCards, the results are planned, not the acquisition as traditionally done in CT; this reduces decision points and clicks, saves time and improves scan-to-scan consistency. Exam Cards can include axial, coronal, and sagittal images, multiplanar reformation (MPR), maximum intensity projection (MIP), iDose4, and IMR, all of which will be automatically reconstructed and can be sent off to where they will be read with no additional work required by the operator. Spectral CT 7500 enables you to pre-set spectral results into your exam cards, and/or change them on-the fly during scan planning, and lastly you can create the spectral results post scan.

iMRC X-ray Tube with 120 kW generator

• Segmented anode and direct liquid cooling allow high-throughput scanning

• Smart Focal Spot doubles the number of projections for high image quality

• Spiral Groove Bearing Precise anode rotation stability for virtually motion-free, focal spot for high image quality

AirGlide Gantry

• Floats on a frictionless cushion of air for high-speed stability

• 0.27 second rotation time

Eclipse DoseRight Collimator

Helps manage delivered dose by eliminating start of scan and end of scan radiation not contributing to image formation in helical scanning.

Reconstruction

Workflow Boost Spectral Reconstructor

Workflow Boost Spectral Reconstructor is specifically designed to address the reconstruction, performance and throughput needs of high throughput and emergency care settings. Philips Spectral CT 7500 Premium with the Workflow Boost Spectral Reconstructor enables routine spectral imaging of up to 250 patients in a 17-hour shift. The accelerated throughput is enabled by utilization of additional hardware for parallel processing of images.

IMR*

Iterative Model Reconstruction (IMR) sets a new direction in CT image quality with virtually noise-free images and industry-leading low-contrast resolution. Moreover, for the first time physicians are also able to simultaneously co mbine image quality improvements on conventional images with significantly lower doses.** This improvement is a breakthrough made possible through Philips first iterative reconstruction built on knowledge-based models.

* Only applies to conventional images.

** In clinical practice, the use of IMR may reduce CT patient dose depending on the clinical task, patient size, anatomical location, and clinical practice. A consultation with a radiologist and a physicist should be made to determine the appropriate dose to obtain diagnostic image quality for the particular clinical task. Lower image noise, improved spatial resolution, improved low-contrast detectability, and/or dose reduction, were tested using reference body protocols. All metrics were tested on phantoms. Dose reduction assessments were performed using 0.8 mm slices and tested on the MITA CT IQ Phantom (CCT183, The Phantom Laboratory), using human observers. Data on file.

iDose4

iDose4 improves image quality† through artifact prevention and increased spatial resolution at low dose. The design seamlessly integrates into your CT department, and provides you the look and feel of conventional, higher-dose images without long processing times.

† Improved image quality is defined by improvements in spatial resolution and/or noise reduction as measured in phantom studies.

O-MAR

Metal artifact reduction for large orthopedic implants (O-MAR). O-MAR works on both conventional and spectral images. Combining virtual high MonoE spectral images with O-MAR significantly reduces metal artifacts.

ConeBeam Reconstruction Algorithm – COBRA

Philips' patented Cone Beam Reconstruction Algorithm (COBRA) enables true three-dimensional data acquisition and reconstruction in helical scanning.

Fast Preview

Display real-time 512 × 512 matrix image reconstruction and 5 mm × 5 mm contiguous slice display with helical acquisition or off-line reconstruction. Images can be modified for window width and level, zoom, and pan prior to larger matrix reconstruction at the end of the acquisition.

Clinical Enhancements

Spectral Cardiac Premium

The Spectral Cardiac Premium package includes Precise Cardiac and Dynamic Myocardial Perfusion.

Precise Cardiac

Precise Cardiac is a smart reconstruction technique designed to improve image quality by reducing motion artifacts in coronary artery images. Precise Cardiac can be applied either in cardiac ECG-gated helical or ECG-gated axial scans (i.e., Step & Shoot Cardiac).

Dynamic Myocardial Perfusion

Dynamic Myocardial Perfusion acquisition mode enables acquiring perfusion images of the myocardium from an ECG gated axial scan over the desired anatomy. There are two possible scan modes, 240 degree scan angle with best temporal resolution and reduced DFOV, or a 360 degree scan angle with the full 8cm coverage. The perfusion sequence can be programmed by adjusting parameters such as cycle time and frequency of sampling

Spectral Electron Density

Electron density values of the tissues in the image are relative to the electron density of water. Electron Density accurately measures electron density of tissues/voxel within the image.

Spectral Cardiac Plus Toolkit

Enables cardiac imaging and includes an ECG monitor, retrospective tagging for helical scans, prospective gating for axial scans (calcium scoring and Step & Shoot). Spectral Cardiac Plus Toolkit includes-

- Philips proprietary beat-to-beat algorithm that automatically finds the best phase for cardiac imaging (in both helical and axial), including arrhythmia detection and management

- Philips exclusive adaptive multi-cycle reconstruction algorithm that enhances temporal resolution of helical scans for both spectral and conventional images resulting in temporal resolution as high as 53ms

- Step & Shoot acquisition mode that enables low-dose, prospectively ECG-triggered, axial thoracic imaging. This allows gated, sub-millimeter, isotropic imaging of the entire thorax (up to 50 cm transaxial field of view), including the coronary arteries. Step & Shoot Complete is well suited for patients with heart rates below 75 bpm.
- Cardiac Viewer

A comprehensive cardiac review application that allows quick visualization of one or more cardiac phases, synchronization of multiple cardiac phases with interactive slab-MIP tools for review purposes, cine mode for cardiac axes views and a calculation of End Systolic Volume (ESV), End

Diastolic Volume (EDV), Cardiac Output (CO), and Ejection Fraction (EF) for ventricular functional assessment.

- Calcium Scoring

Provides Agatston, Volume, and Mass scores. Incorporates a database of greater than 5,000 asymptomatic multi-slice calcium scoring scans.

- DoseRight Cardiac

ECG-triggered dose modulation reduces tube current up to 80% during acquisition of non-desired phases (estimated overall dose reduction of ~45% for single-phase, end-diastolic imaging). For example, only one phase may be required for coronary CTA, and the system will reduce the mA during the other portions of the acquisition.

- COBRA Reconstruction (COBRA Cardiac)

Philips' patented Cone Beam Reconstruction Algorithm (COBRA) enables true three-dimensional data acquisition and reconstruction in both axial and helical cardiac scanning.

- CT Reporting

Provides capabilities for editable paper, print, and electronic clinical reports; including display of key images and results. Reports are available for paper or electronic distribution to referring physicians, patients, or for medical records.

Spectral CT Viewer

The Spectral CT Viewer is designed to enable spectral quantification through proprietary spectral tools, including the exclusive Spectral Magic Glass. By offering unique capabilities across clinical areas, spectral applications provide additional anatomical and functional information to enhance diagnostic confidence.

The Spectral CT Viewer utilizes the spectral results and extended data that is produced by the scanner to provide advanced, user-oriented imaging tools.

Spectral Neuro Essentials

Spectral Neuro essentials includes Jog Scan, Advanced Brain Perfusion and Spectral Electron Density.

Jog Scan provides up to 160 mm of organ coverage for perfusion studies. An axial scan is taken in one location, the couch translates to another location within a few seconds, and another axial scan is taken. These multiple data sets are registered automatically to provide the extended coverage.

Advanced Brain Perfusion application on console enables reviewing the perfusion image.

Spectral Electron Density- Electron density values of the tissues in the image are relative to the electron density of water. Electron Density accurately measures electron density of tissues/voxel within the image.

Dose Management

Line #	Part #	Description	Qty	Each	Price

Philips' DoseWise philosophy is a set of principles and practices that ensures the best possible outcomes with minimal risk to patients and staff. The Philips Spectral CT 7500 platform employs a number of features that help provide high dose efficiency.

NEMA XR-29 Compliance

This system complies with the NEMA XR-29-2013 Standard Attributes on CT Equipment Related to Dose Optimization and Management. The standard includes a group of CT attributes that contribute to or help perform optimization/management of doses of ionizing radiation while still enabling the system to deliver the diagnostic image quality needed by the physician. It encompasses: DICOM Radiation Dose Structured Reporting, Dose Check Feature (Dose Notification and Dose Alerts), Automatic Exposure Control (Dose Modulation) and Reference Adult & Pediatric Protocols.

NEMA XR-25 (DoseCheck)

Supports an operator notification in each ExamCard that will be shown if an acquisition is planned that exceeds a specified CTDIvol or DLP. In addition, an alert is available such that, if an acquisition is planned and the total exam will exceed a specified CTDIvol or DLP, the operator will be required to enter his or her name and (if configured) a password to proceed, or the operator can adjust the scan parameters. Compliant with NEMA XR-25 and XR-29.

DICOM Structured Report for Dose (DICOM SR)

Dose SR complies with the IEC, DICOM PS and IHE standards for dose reporting. The report includes CTDIvol and DLP dose values. These can be transferred to external systems such as HIS/RIS, PACS, or dose registries.

Locking Protocols

Prevents unapproved modification of scanning protocols through password-protection.

Dedicated Pediatric Protocols

Developed in collaboration with top children’s hospitals, age and weight-based infant and pediatric protocols enhance image quality at low dose.

DoseRight ACS (Automatic Current Selection)

Personalizes the dose for each patient based on the planned scan by suggesting the lowest mAs settings to maintain consistent image quality at low dose throughout the scan.

DoseRight Z-DOM (Longitudinal Dose Modulation)

Automatically controls the tube current, adjusting the signal along the length of the scan, increasing the signal over regions of higher attenuation (e.g., shoulders, pelvis), and decreasing the signal over regions of less attenuation (e.g., neck, legs).

DoseRight 3D-DOM (Three-dimensional Dose Modulation)

3D-DOM combines angular and longitudinal patient information to modulate dose in three dimensions (x-y-z-axis). It incorporates modulation of tube current-time product (mAs) according to changes in individual patient’s size and shape in the transverse (x-y-axis; angular) direction

during helical scans, in addition changes in the craniocaudal or caudocranial (z-axis; longitudinal) direction, as the tube rotates.

Dose Displays

• Volume Computed Tomography Dose Index (CTDIvol)

• Dose-Length Product (DLP)

• Dose Efficiency Warning

• Size Specific Dose Estimation

Scan and Image Acquisition

Scan Ruler
Provides a visual, highly interactive view of the entire procedure that allows 1-click updates to important study events.

Helical Scanning
Multiple contiguous slices acquired simultaneously with continuous table movement during scans allowing for multiple, bidirectional acquisitions.

Axial Scanning
Multiple-slice scan with incremental table movement between scans.
Smart Focal Spot

Doubles the in-plane and longitudinal data sampling density from the detectors effectively doubling the number of detectors and provides high spatial resolution in axial and helical scanning.

Test Injection Bolus Timing

Establishes the appropriate contrast injection delay time using a test injection. A real-time graph of the enhancement in a selected region of interest is displayed. The delay time is then selected to provide ideal peak contrast enhancement and reduced contrast usage.

Bolus Tracking
An automated injection planning technique that permits a user to monitor actual contrast enhancement and to initiate scanning at a pre-determined enhancement level. Combine with SAS for full automation.

Spiral Auto Start (SAS)

Spiral Auto Start allows the injector to communicate with the scanner. This allows the technologist to monitor the contrast injection and to start the scan (with a predetermined delay) while in the scan room.

NOTE:

• Costs to upgrade an approved injector and any cabling is the responsibility of the user.

• Contact Philips to verify compatibility with a specific injector.

Image Management, Storage, and Filming

DICOM 3.0-compliant image format. Lossless image compression/decompression is used during image storage/retrieval to/from all local storage areas. Images can be auto-stored to selected archive media.

DICOM DVD/CD writer

Stores DICOM images and associated image viewing software on DVD/CD media. Images on these DVD/CDs can be viewed and manipulated on PCs meeting the minimum specifications. Ideally suited for individual result storage and referring physician support.

Filming

Allows the user to set up and store filming parameters. Pre-stored protocols can be set to include auto-filming. The operator can film immediately after each image, at the end of a series, or after the end of a study, and review images before printing. The operator can also automatically film the study at three different windows and incorporate Combine Images functionality to manage large datasets. Basic monochrome and color DICOM print capability are supported.

Networking

Supports 10/100/1000 Mbps (10/100/1000 BaseT) networks. For optimal performance, Philips recommends a minimum 100 Mbps network (1 Gbps preferred) and for the CT network to be segmented from the rest of the hospital network.

DICOM Connectivity

Full implementation of the DICOM 3.0 communications protocol allows connectivity to DICOM 3.0 compliant scanners, workstations, and printers; supports IHE requirements for DICOM Connectivity.

Operator Console, Patient Handling, and Setup

The operators' console includes the necessary hardware to use the scanner including host computer, cabinets, dual monitor configuration, and control box. The system provides applications that assist clinicians to improve workflow and planning as well as post processing analysis and review to help you quickly gain the desired view. All of these combine in a graphical interface that allows you to easily execute scans and analyze images.

Automatic Scan

Enables automatic execution of pre-planned studies, reconstruction, background image archiving to local or remote storage devices, without operator intervention.

Gantry Control Panels

Line #	Part #	Description	Qty	Each	Price

Touchscreen interface with integrated ECG display. Audio notification and visual countdown 10 seconds before X-ray On so that operator and staff can exit room before X-ray On.

Breathing Lights and Patient Aperture Panel

Visual display of breathing instructions coordinated with recorded breath hold instructions (Auto Voice) to improve the patient's experience and compliance.

Intercom System and Autovoice

The intercom system provides two-way communication between the scan room and the operator console. Additionally, a standard set of commands for patient communication before, during and after scanning is available in several pre-selected languages. Customized messages can also be created.

Dual Surview Planning

Provides flexibility in exam planning with both anteroposterior and lateral surviews.

Automatic Procedure Selection

Maps the procedure selection from the HIS-RIS with individual scan protocol(s) simplifying the scanning process. Only the most relevant scan protocol(s) for any requested procedure are shown to the user, so that only the desired scanning procedures are performed. This is especially useful for infrequent users of the CT scanner.

Table Acce ssories

Table pad, table extension, standard head holder, head holder cushions and pads, IV Pole, head rests.

Load and Unload Foot Pedals

Load and Unload foot pedals allow the operator to move the patient couch to the load or unload position using a foot pedal thus improving patient handling efficiency by the freeing the operator's hands to prepare, restrain, or release the patient.

Siting information

Power Requirements

380-480 VAC

50/60 Hz

225 kVA supply (175 kVA momentary)

Three-phase distribution source

Note: Windows is a registered trademark of Microsoft Corporation in the United States and other countries.

Clinical Education Package for IQon Spectral CT:

CT Introductory E-Learnings: Introductory electronic content is provided on the Philips Learning Center educational portal. This content provides an overview of the Philips Spectral CT scanner. Course topics include demonstrations on operation, exam card management, dose tools, result concepts, workflow, and Spectral scanning and analysis. Content is designed to provide the customer familiarity with the workflow and software prior to onsite training. It is recommended that this online self-paced learning be completed prior to the offsite Essentials course and initial handover. Additional resources include reference manuals, white papers and Clinical Elements.

Staff Modality Pre- Assessment with e-learning: Staff Modality Pre- Assessment with e-learning: Philips will provide access for up to five (5) CT technologists, as selected by customer, to a modality assessment. Upon completion of assessment, the individual technologist will receive results and instructions on ordering ASRT's CT Basics: The Series, if desired. The modules will help to enhance the technologists CT knowledge. A total of 16 CEUS are provided upon full completion of the series.

Clinical Consultation Interview Virtual: Philips Education representative(s) will conduct an assessment to evaluate site demographics, workflow, and identify the key contact personnel and decision makers. During this process, Philips conducts a remote interview with the customer to learn details of CT workflow. Additionally, a copy of the Customer's CT Exam Card list is requested to be made available to Philips Education representative. Customer information provided during this process is the first building block for planning educational support and Clinical Exam Card configuration. The goal of the interview is to provide a smooth transition to onsite training once the system is installed.

CT iPatient Essential Training Virtual: Philips will provide two (2) CT Technologist with an overview of didactic training covering basic functionality and work-flow of the CT scanner with the iPatient user interface. In order to provide trainees with the ability to execute all fundamental operations on their system, and to achieve maximum effectiveness, this class should be attended no earlier than two weeks prior to system installation. This eight (8) hour class is delivered virtually, over a two-day period and is scheduled based on your equipment configuration and availability. Due to program updates, the number of class hours is subject to change without notice. Customer will be notified of current, total class hours at the time of registration. This class is a prerequisite to your equipment handover OnSite Education. CEU credits may be available for each participant who meets the guidelines provided by Philips. Please refer to program details for more information.

Spectral CT Pre-Training 24hr Onsite: The Philips Clinical Applications Specialist (CAS) will provide a twenty-four (24) hour preparatory session for CT scanner preparation. This session allows the Philips CAS to assist your lead technologist in building scanner Exam Cards (protocols), verify scanner performance and QA, confirm IntelliSpace Portal and Magic Glass on PACS integration, in preparation for clinical use. The CAS will coordinate and deliver a Spectral CT presentation and review Philips Spectral documentation with appropriate staff, to include radiologists and technologists. No ASRT credits available. Philips personnel are not responsible for actual patient contact or operation of equipment during education sessions except to demonstrate proper equipment operation.

Spectral CT Training 24hr Onsite: This twenty-four (24) hour training event will fine tune and expand upon knowledge gained during the Virtual iPatient Essentials program with focus on optimizing exam cards, scanning techniques and post processing spectral data. In addition, this event will provide support for a previously defined physician group to establish Spectral workflow and determine desired Spectral results utilizing approved exam cards. This session is to be attended by the same two (2) technologists from iPatient Essentials, and up to two (2) more of

Line #	Part #	Description	Qty	Each	Price

your dedicated CT Technologists, preferably from night or weekend shifts. ASRT CEU credits may be available for each participant that meets Philips Guidelines. Note: Site must be patient-ready. Due to legal responsivity of Philips and the customer site, Philips personnel may not provide direct patient contact or handle operation of the equipment during scanning.

Spectral CT Radiologist Training 24hr Onsite: This twenty-four (24) hour training event will augment the technologist training by providing observation of exam card selection, patient acquisition, post processing and review of spectral results with assigned radiologists. The CAS will ensure that the workflow and results achieved are within the desired specifications of the approving radiologists. Physician engagement will include a review of patient cases, demonstrating the utilization of varied spectral results and indications for use, in identifying specific disease process. The advantages of Magic Glass on PACS will be highlighted to demonstrate the ease of visualizing multiple results simultaneously without having to incorporate a dedicated workstation. Note: Site must be patient-ready. Due to legal responsivity of Philips and the customer site, Philips personnel may not provide direct patient contact or handle operation of the equipment during scanning.

CT OnDemand Clinical Support: On-demand assistance is provided via remote enabling technologies by a remote CT Clinical Services Specialist up to but not limited to 40 hours. Topics may include image review/comparison, user-interface demonstration, system troubleshooting, and protocol optimization. This will provide flexible training options after the onsite sessions on a schedule that works for the customer. On-demand hardware installed on the system is a pre-requisite for this service. Considerations for virtual connectivity: Philips CAS will determine connectivity and training plan prior to virtual training.

Separate Computer or smart phone with communication software (Zoom or MS Teams)

Internet connection if separate computer is used (wired connection recommended)

HD Webcam (recommended)

Headset/conference speaker compatible with communication device and software (recommended).

CT Adoption Support Virtual: Adoption Support is provided virtually up to but not limited to twenty-four (24) hours. These virtual sessions cater to Radiologists, with topics including case review utilizing varying Spectral results and indications for use while encouraging adoption. Sessions will be scheduled based upon mutual availability of both parties.

Considerations for virtual connectivity: Philips Specialist will determine connectivity and training plan prior to virtual session.

Recommend using separate computer or smart phone with communication software (Zoom or MS Teams)

Internet connection if separate computer is used (wired connection recommended)

HD Webcam (recommended)

Headset/conference speaker compatible with communication device and software (recommended).

Education expires one (1) year from equipment installation date (or purchase date if sold separately). **Ref #29666166666366567667767867 9-23032021**

100040 Spectral CT

Line #	Part #	Description	Qty	Each	Price
2	**FNA1196	Spectral CT Education Package New Philips Customer	1	$19,306.22	$19,306.22

Spectral CT Clinical Education Package New Philips Customer:

Medical Imaging Consultants (MIC) will provide three (3) self-study programs as selected by customer. There are three (3) CT programs to choose from:

CT Registry Review: This ASRT accredited, self-study program presents the physical principles, clinical imaging strategies and unique jargon of CT. It equips the technologist with a strong background in the clinical utility of CT so that subsequent console training can proceed quickly and more effectively. Each of the eight (8) study modules are separately accredited so technologists can earn credits as they go through the program. Study Guidelines provide detailed explanations to answer every post-test question. Note: Training expires after six (6) months from purchase date.

CT Cross Trainer: This ASRT accredited, correspondence course provides valuable knowledge to novice or brand new CT technologists, while keeping technical jargon to a minimum. The online course is presented in six (6) individual, self-study modules, each of which focuses on a specific CT topic. Note: Course entitlement must be used within six (6) months of purchase date.

CT Sectional Anatomy & Imaging Strategies: This ASRT accredited course consists of six (6) comprehensive study modules that are delivered in an easy to follow book format. Each study module contains thirty-five to seventy pages of easy-to-follow text, with an abundance of illustrations, images and summaries, and is written in the language of the clinical technologist. The first study module introduces the technologist to the concepts and terms used when working with sectional anatomy imaging modalities. Study modules 2-6 focus on specific regions of the body by identifying key anatomical structures and their physiological significance as well as practical sectional imaging strategies. This course has been accredited for eighteen (18) Category A CE credits, that are earned by passing a post-test for each study module.

CT Customization & Transition Program Virtual: The Customization & Transition program is designed to provide a customer who is new to Philips CT, similar or better image quality than their previous CT system, regardless of vendor and make the conversion as simple as possible. Philips Clinical Applications Specialist will convert a total of ten CT clinical protocols scanned on the customer's previous CT system to Philips configured CT ExamCards. This process includes Image quality acceptance by the Customer's designated physician representative. Philips Clinical Applications Specialist, working with the Customer Lead Technologist will make requisite adjustments to the exam card database in compliance of required image quality standards.

Spectral CT FollowUp Training Onsite: Clinical Education Specialists will provide two (2) separate sessions of twenty-four (24) hours follow-up Spectral CT OnSite Education for up to four (4) students, selected by customer, including technologists from night/weekend shifts if necessary. CEUs are not available in all cases. Please read Guidelines for more information, which will be provided to you during the scheduling process. Note: Philips personnel are not responsible for actual patient contact or operation of equipment during education sessions except to demonstrate proper equipment operation.

Peer to Peer Spectral Workshop Virtual: This intensive workshop is intended for radiologists and/or technologists seeking essential understanding of Philips spectral CT. The program includes a comprehensive overview of the technology, clinical applications and adoption techniques for Spectral CT acquisition and analysis as experienced by a key opinion leader in Spectral imaging. The virtual workshop commences with a lecture on IQon CT Spectral principles, applications and industry variances, followed by a review session of assorted cases, employing practice

Line #	Part #	Description	Qty	Each	Price
		techniques, recommendations and interpretation of spectral results. The workshop provides an opportunity to discuss the advantages of these superior imaging techniques amongst faculty with clinical and research experience. Education expires one (1) year from equipment installation date (or purchase date if sold separately).			
3	**NCTA485	**Keyboard Language - English**	1		
4	**NCTD780	**Spectral Electron Density**	1	$20,195.50	$20,195.50
		The accurate electron density measurement allows calculation of accurate proton stopping power. Electron density values of the tissues in the image are relative to the electron density of water. Electron Density accurately measures electron density of tissues/voxel within the image.			
5	**NCTD945	**Replace Philips CT**	1		
6	**FCT0420	**Oper Manual - English (US)**	1		
7	**NCTE021	**High performance patient table**	1	$0.00	$0.00
		The High-Performance Patient Table is an ultra- fast table designed to meet the CT imaging needs of radiology, interventional radiology, and cardiology and in oncology as part of treatment preparation and radiation therapy planning and compliant with AAPM TG66 guidelines. The patient table is allowing for patient loads of up to 307kg (677 lbs.). Table Specifications:- Aximum travel range 2,100 mm- Axial scan range- 2,000 mm- Pitch 0.07 – up to 1.65- Z-position accuracy +/- 0.25 mm- Longitudinal speed 0.5 mm/s – 600 mm/s- Lowest table height 430 mm- Maximum load capacity 307 kg (677 lbs.) The table includes all essential accessories to ensure stable positioning and patient comfort: Arms over-head rest Legs raising device Restraining straps Head Holder on the Top Phantom Holder Scan line marker			
8	**NCTE396	**COMPRESSOR KIT 50/60 HZ**	1		
		COMPRESSOR KIT 50/60 HZ			
9	**NNAC407	**IQon ISP Entitlement**	1		
		A Philips Clinical Workflow Adoption Consultant will provide twenty-four (24) hours of IntelliSpace Portal for Technologists and /or Radiologists over 3 consecutive days. Philips will deliver customized training tailored to your implementation and workflow. Philips requires no more than 5 attendees per session to maximize the educational value. Attendee(s) are responsible for adhering to the agreed upon clinical education guidelines. ASRT CEU credits may be available for each participant who meets ASRT criteria. Education expires one (1) year from equipment installation date (or purchase date if sold separately).			
10	SP059B	**Universal Power Supply**	1	$34,850.00	$34,850.00

100040 Spectral CT

Line #	Part #	Description	Qty	Each	Price

480VAC/60Hz/125kVA/19kWH Staco Uninterruptible Power Supply (UPS) with Voltage Regulator and Power Entrance Controller functionality. Provides power to permit up to 30 minutes of scanning after a power failure. This allows the user to complete the patient scan, save data and make an orderly system shut-down. Also insures that incoming power meets Philips Healthcare specifications for CT system reliability and performance. The UPS regulates utility voltage deviations, stabilizes line frequency, and subdues line voltage surges and spikes, prevents loss of phase and total power outages, while also ensuring positive phase rotation. - Input voltage: 480 VAC - Line Matching Transformer required for 60 Hz input voltages with less than 480 VAC input. - Start-up commissioning included.

11	**SP019**	**Trade in Allowance**	**1**	**($75,000.00)**	**($75,000.00)**

Customer represents and warrants that (i) Customer has, and shall have when title passes, good and marketable title to the equipment being traded in and (ii) has the authority to effect such trade in.

Product: 100016.000 Brilliance CT 64 Channel Systems
Serial Number: 95202
Manufacturer: **PHILIPS HEALTHCARE**

Trade-In authorization number:	104504
Trade-In Value:	$75,000.00
De-install Date:	6/30/2022

Customer will be trading-in equipment that is described on the attached System Disclosure Form (the “Trade-In”), which Trade-In the parties agree (i) will be removed on the De-install Date and (ii) is currently in the condition as represented on the System Disclosure Form. In addition, the parties agree as follows:

1. Customer represents and warrants that Customer has good and marketable title to the Trade-In as of the date of this Quotation and will have good and marketable title when Philips removes the Trade-In from Customer's site (the “Removal Date”);
2. Title to the Trade-In shall pass from Customer to Philips on the Removal Date, unless otherwise agreed by Philips and the Customer;
3. Notwithstanding anything to the contrary in any Business Associate Addendum, Customer represents and warrants that as of the Removal Date all Protected Health Information will have been de-identified or removed from the Trade-In;
4. Philips may test and inspect the Trade-In prior to de-installation. If the condition of the Trade-In is not substantially the same on the Removal Date (ordinary wear and tear excepted) as it is identified on the System Disclosure Form, then Philips may reduce the price quoted for the Trade-In;
5. If the removal date is delayed until after the De-Install Date, unless Philips causes the delay, then Philips may reduce the price quoted for the Trade-In by six percent (6%) per month.
6. Philips is responsible for normal de-installation costs of the Trade-In.
7. The trade-in value will not include costs associated for any facility modifications and/or rigging required for de-installation and must be accounted for separately.
8. Customer is responsible for all plumbing necessary to properly drain coolant from chiller system and cap the lines.
9. Prior to the Removal Date, Customer shall remove from the room all equipment that is not being de-installed.

100040 Spectral CT

LIST PRICE	$4,423,730.00
DISCOUNT	$2,503,502.00
TRADE IN AMOUNT	($75,000.00)
NET PRICE	$1,845,228.00

Buying Group: UNIVERSITY OF VERMONT HEALTH NETWORK Contract #: SBA11583M and LSP000030

Addt'l Terms: The specific Contract # referenced above represents the Novation or Vizient agreement with Philips containing discounts, fees and any specific terms and conditions, including the Vendor's Terms and Conditions of Sale (subject to such Contract),

Each Quotation solution will reference a specific Buying Group/Contract Number representing an agreement containing discounts, fees and any specific terms and conditions which will apply to that single quoted solution. If no Buying Group/Contract Number is shown, Philips' Terms and Conditions of Sale will apply to the quoted solution.

Each equipment system listed on purchase order/orders represents a separate and distinct financial transaction. We understand and agree that each transaction is to be individually billed and paid.

Price above does not include any applicable sales taxes.

The preliminary delivery request date for this equipment is:_____.

If you do not issue formal purchase orders indicate by initialing here_____.

Tax Status:

Taxable_____ Tax Exempt_____

If Exempt, please indicate the Exemption Certification Number:_____, and attach a copy of the certificate.

Delivery/Installation Address:

_____

_____

_____

Invoice Address:

_____

_____

_____

Contact Phone #:

_____

Contact Phone #:

_____

Purchaser approval as quoted:

_____

Date:

_____

Title:

_____

This quotation is signed and accepted by an authorized representative in acknowledgement of the system configuration, terms and conditions stated herein.

100861 ISP - CT Clinical Apps

System Type: New
Freight Terms: FOB Destination
Warranty Terms: Part numbers beginning with two (2) asterisks (**) are covered by a System 12 Months Warranty. All other part numbers are third (3rd) party items.

Special Notations: Contingencies must be removed 120 days before scheduled shipment to assure delivery on specified date.
Any rigging costs are the responsibility of the Purchaser.

Additional Terms: The specific Contract # referenced above represents the Novation or Vizient agreement with Philips containing discounts, fees and any specific terms and conditions, including the Vendor's Terms and Conditions of Sale (subject to such

Line #	Part #	Description	Qty	Each	Price
1	**NICA798	Virtual Solution (VM based)	1		

NICA798- Virtual Solution (VM based)

IntelliSpace is designed to create smart clinical integration. It is a thin-client applications server that turns virtually any PC that meets the minimal requirements into an advanced multimodality imaging system workspace that can support radiology, cardiology, oncology, neurology, orthopedics, and other specialties' imaging needs, thereby streamlining clinical workflow. IntelliSpace Portal uses advanced networking capabilities to enable collaboration among clinicians for fast, confident diagnosis and better informed patient care. Clinicians can review the results and conduct measurements on images of multiple imaging modalities - including studies acquired from multiple vendors' imaging equipment -- at their convenience in their preferred location. Until recently, the most powerful visualization workstations were housed only in the radiology department, requiring a referring physician to make a special trip to view advanced images so crucial to accurate patient diagnoses. With Intellispace Portal's advanced networking and thin-client technologies, the access to powerful visualization and image processing is significantly enhanced. IntelliSpace Portal now runs on a virtual server environment, allowing you to capitalize on the power of your in-hospital network. The IntelliSpace Portal offers powerful capabilities, both standard and optional. Standard capabilities include:

• Thin-client architecture and multivendor compatibility that makes image data and applications available virtually anywhere for CT, MR, Nuclear Medicine, Ultrasound, iXR and DXR images
• Guided Task workflow walks users through each processing stage from start to finish
• Use of bookmarks, interactive snapshots and other convenient tools to increase efficiencies and reduce training needs
• New color scheme for easier reading
• Performance-based licensing eliminates the need for purchasing a fixed set of licenses
• "Export to Neuro Surgery" feature to provide surgeons with accurate position information of white matter tracks, brain activation areas as well tumors in relation to an anatomical reference series designed for MR Neuro applications.
• Multimodality Viewer for display of CT, MR, Nuclear Medicine, Ultrasound, iXR and DXR datasets - standard
• Smart MR Viewing, smart linking, cine movie loop for MR datasets
• Save electronic Key Image Notes (KIN) directly within images to increase informal communication between various users
• Multimodality Fusion: PET-CT, SPECT-CT, NM-CT, CT-CT, MR-MR and CT-MR
• Automatic Registration: PET-CT, SPECT-CT, CT-CT and MR-MR
• PET/CT Alpha blending and 2D/3D SUV calculations
• Display of multi-frame secondary captures
• 3D Volume rendering, MIP, VIP, minIP, SurfaceMIP
• Clinical results can be ported directly into PACS or RIS using HL7, Encapsulated-PDF via DICOM, or mXML. Save Key images, notes, and tables directly to your reports; combine findings from multiple clinical applications into a single patient level report to be transferred directly into the PowerScribe 360 Diagnostic report.

Slab Review capabilities including regional investigation and curved MPR
• Volume Explorer: for instant and interactive seed-growing 3D segmentation

• "Glass View" to display bony structures in relation to 3D volumes
• Comprehensive DICOM Printing ("Filming")
• Dual monitor support -- for color monitors.
• DICOM & IHE compliance
• Supports PACS integration: Ability to launch the IntelliSpace Portal clinical applications from a PACS or RIS system at the time when the user is reviewing a study. This may improve workflow by automated steps, help reduces mistakes such as typo errors, eliminate additional search on ISP client for specific patients and even study/series after launching ISP client from PACS client. Closing study in PACS will also close it on Portal. Automated exchange of bookmarks and results between ISP and PACS. Note: Certain PACS vendors may charge for the configuration services which are required per site.
• IntelliSpace Portal proprietary technology streams display to the client over a LAN, WAN or any broadband Internet connection through the hospital's VPN (virtual private network) without the need to download the CT, MR or Nuclear Medicine data to the client PC. The 'heavy lifting' and complex processing of the data is done on the server.

Key specifications and requirements of the VM Ware Client:
VM Ware Specifications:
Memory:
• Memory (RAM) minimum: 2GB RAM. Recommended: 4 GB or above.
• Memory (RAM) minimum: 4GB RAM for clients also running PACS
• Memory (RAM) for NM applications and/or when other applications are running in parallel minimum: 4 GB RAM

CPU:
• Processor (CPU minimum): 2 cores @ 1.8 GHz / 4 cores @ 1.6 GHz
• Processor (CPU Minimum for NM applications and/or when other applications are running in parallel): 3 Cores @ 2.8 GHz / 4 Cores @ 2.4 GHz• Processor (CPU recommended): 3 Cores @ 2.8 GHz / 4 Cores @ 2.4 GHz
Disk Space:
Free Disk Space*: 4 GB or above (on Drive C)
Additional 5 GB of free disk space are required to burn DVD.

Monitor:
• Minimal screen resolution: 1024x768. Recommended: 1280x1024 (or above)
• Minimal screen Resolution for NM Apps: 1280x1024 (or above)
• Up to 3 Mega Pixel monitors are supported
• Monitor Dots Per Inch Settings: 96DPI
• 24bpp (or higher) color depth monitors
• No support for monochrome or grayscale-only monitors)
Multi monitor: Require adequate support of client display card and driver
Graphic card (added in release notes)

The client machine should also support a graphic card with the following requirements:
1. Native DirectX 9.c support
2. Native GDI+ Support
3. Native Windows Aero interface support
4. 128MB RAM (for the graphic card)

Network
Minimum Network adapter speed: 100 Mbps or above
Recommended Network adapter speed: 1 Gbps or above

LAN (Hospital) Network:
Network bandwidth/latency (LAN): 100 Mbit/s or above- (1 Gigabit/s or above recommended), 0-5ms Latency recommended.

Line #	Part #	Description	Qty	Each	Price

Home connection
• Network bandwidth/latency (for home connection): 5 Mbit/s or above download speed, 512Kbit/s or above upload speed with latency <20ms
• Network bandwidth/latency for NM Apps (for home connection): 10 Mbit/s or above download speed, 1Mbit/s upload speed with latency <10ms
• Network bandwidth/latency for NM 3rd Party Apps (for home connection, AutoQuant, Corridor4DM, ECTb, NeuroQ) :
• 100Mbit/s download/ 10Mbit/s upload with <10ms latency

Software Pre-Requisites:Supported OS:

• Windows 7 (32 & 64 bit)
• Windows 8 / 8.1
• Windows 10
• Windows 7, 8, 8.1 and Windows 10 require an administrative account for initial installation

Pre-Installed software:
• Net Framework 4.5.2 Client + Extended or above
• Additional Software Recommended (for optional features):
• Adobe Acrobat Reader [for Report & Help]
• Adobe Flash Player [for On-line Web Trainings] Windows Media
• Windows Media Player 9.0 or above [for saving Movies] IMAPIv2 [for Burning CD/DVD]
• DirectX 9.c (or better) – Optional component required for better application experience

Server VM Specifications:
• VMware vSphere 5.1 – 6.0
• OS: Windows Server 2008 R2 Standard (English Local); from Version 9.0: Windows Server 2012 R2 Standard (English Local)
• NET version installed 4.5.2
• Storage – two local virtual drives required (2000 IOPS):
• Drive C (OS + apps): ISP v7: 80 GB minimum; ISP v8 and v9: 100 GB minimum
• Drive D (Data): 0.5 – 5TB
• Network – at least 1 Gbps

From Version 9.0 VM specifications can be scaled to meet the needs of fewer concurrent users:

Concurrent Users	Number of Cores	RAM [GB]
2	6	12
3	8	16
5	8	24
10	12	32

Note: for IQon Spectral applications you must deploy the Portal in the VMware equivalent for Dual server (EX) configuration with Extended Storage.

2	****NICB420**	**CT Spectral Standard**	**1**	**$13,367.95**	**$13,367.95**

100861 ISP - CT Clinical Apps

Line #	Part #	Description	Qty	Each	Price

CT Spectral Standard is a suite of advanced visualization option designed for the Philips IQon Spectral CT Scanner. It includes: Spectral enhanced CT Viewer (sCT Viewer), Spectral Magic Glass on PACS (SMGoP), and Spectral Light Magic Glass.

Spectral enhanced CT Viewer (sCT Viewer) enables advanced visualization and analysis of CT spectral and conventional datasets. Key Benefits: Spectral results include conventional CT images, MonoEnergetic (MonoE) images at energies ranging between 40 to 200 keV, Iodine Density and Z Effective results Allows retrospective analysis that automatically generates spectral results with interactive analysis Easy-to-use factory defined viewing presets per clinical question Spectral Magic Glass on PACS (SMGoP) enables the review and analyze of Philips spectral CT data sets directly within the PACS viewer. Key Benefits: CT Spectral Magic Glass on PACS can be integrated into the PACS of selected vendors*. Notes: * Please contact your local Philips representative for details. The sMGOP requires the SBI DICOM data series to be available on the ISP server in order to enable all the Spectral Review features (SBI is a DICOM image with proprietary parts).

- Pre-requisites: IntelliSpace Portal 10 or higher
- Enhancements for version 12:
- CT Spectral Viewer incl.: auto registration workflow within the package similar to routine CT Viewer

Spectral Light Magic Glass is a software option that enables swift spectral inspection directly on loaded studies within a range of ISP CT applications. Spectral Magic Glass Option is available for the following applications: Virtual Colonoscopy, Liver Analysis, Acute Multifunctional Review, CT TAVI,CT Pulmonary Artery Analysis, CT Brain Perfusion, CT Body Perfusion Spectral LMG can be used for CT images only or images generated on Philips IQon Spectral CT Scanner. Key Benefits: •Enables on-demand spectral tools during normal reading of images on ISP applications. Enables retrospective analysis that automatically generates spectral results with interactive analysis. These results include MoneE images from 40 to 200 keV, iodine density (mg/ml), virtual non-contrast (VNC), iodine no-water, effective Z-maps and conventional CT images. SLMG requires SBI DICOM data series to be available on the ISP server in order to enable all the spectral review features (SBI is a DICOM image with proprietary parts)

3	****NICB422**	**CT Spectral Tumor Track**	**1**	**$2,763.91**	**$2,763.91**

The Spectral Tumor Tracking (sTT is part of MMTT) application is intended to assist clinicians in viewing and evaluating CT images acquired on the IQon CT scanner for the inspection of tumors, as contrast enhanced, soft tissue oriented, and whole body scans.

Key Benefits:

• Lesion viewing and analysis based on different spectral data types such as iodine density maps or virtual non-contrast-enhanced images
•Tissue segmentation and editing tools to generate user-defined regions of interest
•Composition properties (effective atomic number, attenuation, HU) of the tumor
• Longitudinal viewing of cases taken from different examination times

Prerequisites: IntelliSpace Portal 9 or higher, Spectral Diagnostic Engine (NICB420) and Enhanced MMTT.

Enhancements for version 12:

CT Spectral Tumor Tracking now offers visualization of additional spectral images types derived from CT Spectral 7 series including Electron-density and Calcium suppressed images.

4	****NICB424**	**CT Spectral CCA**	**1**	**$1,658.01**	**$1,658.01**

100861 ISP - CT Clinical Apps

Line #	Part #	Description	Qty	Each	Price

The CT Spectral Comprehensive Cardiac Analysis (sCCA part of CT CCA) application is intended to assist clinicians in viewing and evaluating cardiovascular CT images acquired on the IQon CT scanner.

Features:

•Extract and edit coronary wall and lumen based on Spectral data
•Perform Plaque analysis based on Spectral data
• The application supports the Spectral Magic Glass option.

Prerequisite: IntelliSpace Portal 9 or higher, CT Spectral Standard (NICB420) and CT Comprehensive Cardiac Analysis (NICA278).

Enhancements for version 12:

CT Spectral CCA (part of CT CCA) now offers enhanced automatic extraction and visualization of the coronary tree, as well as enhanced automatic labeling of the different coronary segments. If required, the user has the ability to edit these results.

5	****NICB426**	**CT Spectral AVA**	**1**	**$2,210.13**	**$2,210.13**

The CT Spectral Advanced Vessel Analysis (sAVA) application is intended to assist clinicians in viewing and evaluating CT Angiography (CTA) cases, as contrast enhanced and whole body CTA scans, acquired on the Philips IQon Spectral CT scanner for the inspection of contrast-enhanced vessels.

Key Benefits:

- Extract and edit vessel wall and lumen based on Spectral data
- Perform lesion analysis based on Spectral data
- Use the Spectral plots to characterize plaques and stenosis
- Compare the extracted vessels using various Spectral results

Prerequisites: IntelliSpace Portal 9 or higher, CT Spectral Standard (NICB420) and MM AVA.

100861 ISP - CT Clinical Apps

LIST PRICE	$120,270.00
DISCOUNT	$100,270.00
	$0.00
NET PRICE	$20,000.00

Buying Group: UNIVERSITY OF VERMONT HEALTH NETWORK Contract #: SBA11583M and LSP000030

Addt'l Terms: The specific Contract # referenced above represents the Novation or Vizient agreement with Philips containing discounts, fees and any specific terms and conditions, including the Vendor's Terms and Conditions of Sale (subject to such Contract),

Each Quotation solution will reference a specific Buying Group/Contract Number representing an agreement containing discounts, fees and any specific terms and conditions which will apply to that single quoted solution. If no Buying Group/Contract Number is shown, Philips' Terms and Conditions of Sale will apply to the quoted solution.

Each equipment system listed on purchase order/orders represents a separate and distinct financial transaction. We understand and agree that each transaction is to be individually billed and paid.

Price above does not include any applicable sales taxes.

The preliminary delivery request date for this equipment is:_____.

If you do not issue formal purchase orders indicate by initialing here_____.

Tax Status:

Taxable_____ Tax Exempt_____

If Exempt, please indicate the Exemption Certification Number:_____, and attach a copy of the certificate.

Delivery/Installation Address:

_____

_____

_____

Invoice Address:

_____

_____

_____

Contact Phone #:

_____

Contact Phone #:

_____

Purchaser approval as quoted:

_____

Date:

_____

Title:

_____

This quotation is signed and accepted by an authorized representative in acknowledgement of the system configuration, terms and conditions stated herein.